Table of Contents

2 TE	2
3 TE	3
1 SN	4
2 SN	5
1 SC	6
2 SC	7
1SN-K	8
2SN-K	9
3SPC	10
4 SP	11
4 SH	12
R13	13
R15	14
6SP 560 / 525 bar	15
PTFE Hose with Nobel - steel netting	16
Convoluted PTFE hose	17
MTH1	18
FLEXbase (14A)	19
FLEXtreme (17A)	20
Kara	21
Low pressure Superconductor	22
Hose bending protection	23
Hose bending protection pipe	24
Hose bending protection rubber	25
Abrasion protection spirale	26
Flat steel spiral	27
Protection spiral -plastic	28
Fire protection hose with silicone coating	29
Burst protection hose	31
Pricking device PVM-50	33

Updated at: 13.11.2024

Dietzel Hydraulik GmbH
Leedenstraße 10
04626 Löbichau

Tel.: +49 (36602) 140-140

E-Mail: vertrieb@dietzel-hydraulik.de

Hydraulic hoses

2 TE

Updated at:
24.05.2022

Tube
oil and water resistant synthetic rubber

Reinforcement
several texile netting inserts

Cover
synthetic rubber with oil and water resistance

Temperature
-40°C to + 100°C

Standard
DIN EN 854

Order no.	DN mm	internal Ø in mm	external Ø in mm	working pressure in mm	burst pressure in bar	min.bending radius R in mm	weight in kg/m
05-04	6	6,4	13,4	75	300	40	0,16
05-05	8	7,9	14,3	68	272	50	0,20
05-06	10	9,5	16,5	63	252	60	0,21
05-08	12	12,7	19,7	58	232	70	0,27
05-10	16	15,9	23,9	50	200	90	0,37
05-12	19	19,0	27,0	45	180	110	0,44
05-16	25	25,4	34,4	40	160	150	0,62

Dietzel Hydraulik GmbH
Leedenstraße 10
04626 Löbichau

Tel.: +49 (36602) 140-140

E-Mail: vertrieb@dietzel-hydraulik.de

Hydraulic hoses
3 TE

Updated at:
24.05.2022

Tube
oil and water resistant synthetic rubber

Reinforcement
several texile netting inserts

Cover
synthetic rubber with oil and water resistance

Temperature
-40°C to + 100°C

Standard
DIN EN 854

Order no.	DN in mm	internal Ø in mm	external Ø in mm	working pressure in bar	burst pressure in bar	min.bending radius R in mm	weight in kg/m
06-04	6	6,4	14,4	145	580	45	0,20
06-05	8	7,9	16,9	130	520	55	0,26
06-06	10	9,5	18,5	110	440	70	0,30
06-08	12	12,7	21,7	93	372	85	0,33
06-10	16	15,9	25,9	80	320	105	0,43
06-12	19	19,0	29,0	70	280	130	0,52
06-16	25	25,4	35,9	55	220	150	0,70
06-20	31	31,8	42,3	45	180	190	0,77
06-24	38	38,1	49,6	40	160	240	1,06
06-32	51	50,8	62,3	33	132	300	1,27

Dietzel Hydraulik GmbH
Leedenstraße 10
04626 Löbichau

Tel.: +49 (36602) 140-140

E-Mail: vertrieb@dietzel-hydraulik.de

Hydraulic hoses

1 SN

Updated at:
24.05.2022

Tube
oil resitsant synthetic rubber

Reinforcement
high tensile steel wire netting

Cover
synthetic rubber with high abrasion, ozone, weather resistance

Temperature
-40°C to +100°C

Standard
DIN EN 853; SAE 100 R1S

Order no.	DN in mm	internal Ø in mm	external Ø in mm	reinforcement Ø in mm	working pressure in bar	burst pressure in bar	min. bending radius R in mm	weight in kg/m
11-04	6	6,4	13,4	11,1	225	900	100	0,28
11-05	8	7,9	15,0	12,7	215	850	115	0,32
11-06	10	9,5	17,4	15,1	180	720	130	0,40
11-08	12	12,7	20,6	18,3	160	640	180	0,50
11-10	16	15,9	23,7	21,4	130	520	200	0,66
11-12	19	19,1	27,7	25,4	105	420	240	0,73
11-16	25	25,4	35,6	33,3	88	350	300	1,08
11-20	31	31,8	43,5	40,5	63	250	420	1,35
11-24	38	38,1	50,6	46,8	50	200	500	1,70
11-32	51	50,8	64,0	60,2	40	160	630	2,20

Dietzel Hydraulik GmbH
Leedenstraße 10
04626 Löbichau

Tel.: +49 (36602) 140-140

E-Mail: vertrieb@dietzel-hydraulik.de

Hydraulic hoses

2 SN

Updated at:
14.03.2023

Tube
oil resitsant synthetic rubber

Reinforcement
2 high tensile steel wire netting

Cover
synthetic rubber with high abrasion, ozone, weather resistance

Temperature
-40°C to +100°C

Standard
DIN EN 853; SAE 100 R2S

DN 6 bis DN 25
Please use our high-quality hose lines of the 2SC variant for these nominal diameters.

Order no.	DN in mm	internal Ø in mm	external Ø in mm	reinforcement Ø in mm	working pressure in bar	burst pressure in bar	min.bending radius R in mm	weight in kg/m
21-20	31	31,8	48,3	44,5	125	500	420	2,30
21-24	38	38,1	54,6	50,8	90	360	500	2,70
21-32	51	50,8	67,3	63,5	80	320	630	3,50
21-36	60	60,0	71,5	68,8	90	360	650	2,66
21-40	63	63,5	77,5	73,2	70	280	760	3,96
21-48	76	76,2	90,5	87,8	45	180	900	3,18

Dietzel Hydraulik GmbH
Leedenstraße 10
04626 Löbichau

Tel.: +49 (36602) 140-140

E-Mail: vertrieb@dietzel-hydraulik.de

Hydraulic hoses

1 SC

Updated at:
24.05.2022

Tube
oil resitsant synthetic rubber

Reinforcement
1 high tensile steel wire netting

Cover
synthetic rubber with high temperature, ozone and abrasion resistance

Temperature
-40°C to +100°C

Standard
DIN EN 857

Order no.	DN in mm	internal Ø in mm	external Ø in mm	reinforcement in mm	working pressure in bar	burst pressure in bar	min.bending radius R in mm	weight kg/m
19-04	6	6,4	13,5	10,2	225	900	75	0,18
19-05	8	7,9	14,5	11,5	215	860	85	0,21
19-06	10	9,5	16,9	13,7	180	720	90	0,28
19-08	12	12,7	20,4	17,0	160	640	130	0,33
19-10	16	15,9	23,0	20,4	130	520	150	0,41
19-12	19	19,0	26,7	23,8	105	420	180	0,52
19-16	25	25,4	34,9	31,3	88	352	230	0,78

Dietzel Hydraulik GmbH
Leedenstraße 10
04626 Löbichau

Tel.: +49 (36602) 140-140

E-Mail: vertrieb@dietzel-hydraulik.de

Hydraulic hoses

2 SC

Updated at:
24.05.2022

Tube
oil resitsant synthetic rubber

Reinforcement
2 high tensile steel wir netting

Cover
synthectic rubber with high temperature, ozone and abrasion resistance

Temperature
-40°C to +100°C

Standard
DIN EN 857

Order no.	DN in mm	internal Ø in mm	external Ø in mm	reinforcement in mm	working pressure in bar	burst pressure in bar	min.bending radius R in mm	weight in kg/m
29-04	6	6,4	14,2	11,2	400	1600	75	0,28
29-05	8	7,9	16,0	12,7	350	1400	85	0,33
29-06	10	9,5	18,3	15,0	330	1320	90	0,42
29-08	12	12,7	21,5	18,3	275	1100	130	0,52
29-10	16	15,9	24,7	21,4	250	1000	170	0,61
29-12	19	19,0	28,6	25,5	215	860	200	0,79
29-16	25	25,4	36,6	33,4	165	660	250	1,10

Dietzel Hydraulik GmbH
Leedenstraße 10
04626 Löbichau

Tel.: +49 (36602) 140-140

E-Mail: vertrieb@dietzel-hydraulik.de

Hydraulic hoses
1SN-K

Updated at:
24.05.2022

Tube
oil resitsant synthetic rubber

Reinforcement
1 high tensile steel wire netting

Cover
synthetic rubber with high temperature, ozone and abrasion resistance

Temperature
-40°C to +100°C

Standard
is not a subject of any standard, the values from comparable standard of DIN EN 857-1 SC are exceeding

Order no.	DN in mm	internal Ø in mm	external Ø in mm	reinforcement Ø in mm	working pressure in bar	burst pressure in bar	min.bending radius R in mm	weight in kg/m
18-04	6	6,4	11,8	10,0	290	1160	40	0,18
18-05	8	7,9	13,6	11,6	250	1000	55	0,22
18-06	10	9,5	16,5	13,7	230	920	65	0,29
18-08	12	12,7	19,0	16,9	200	800	80	0,35
18-10	16	15,9	22,3	20,5	150	600	105	0,43
18-12	19	19,0	26,2	24,0	125	500	120	0,57
18-16	25	25,4	34,0	31,3	110	440	160	0,82

Dietzel Hydraulik GmbH
Leedenstraße 10
04626 Löbichau

Tel.: +49 (36602) 140-140

E-Mail: vertrieb@dietzel-hydraulik.de

Hydraulic hoses
2SN-K

Updated at:
24.05.2022

Tube
oil resitsant synthetic rubber

Reinforcement
2 high tensile steel wire netting

Cover
synthetic rubber with high temperature, ozone and abrasion resistance

Temperature
-40°C to +100°C

Standard
is not a subject of any standard, the values from comparable standard of DIN EN 857-2 SC are exceeding

Order no.	DN in mm	internal Ø in mm	external Ø in mm	reinforcement Ø in mm	working pressure in bar	burst pressure in bar	min.bending radius R in mm	weight in kg/m
28-04	6	6,6	13,4	11,4	450	1800	45	0,29
28-05	8	8,3	15,0	13,0	420	1680	60	0,34
28-06	10	9,9	17,0	14,9	385	1540	70	0,44
28-08	12	13,0	20,7	18,7	345	1380	90	0,54
28-10	16	16,4	23,6	21,6	290	1160	130	0,63
28-12	19	19,5	27,7	25,7	280	1120	160	0,84
28-16	25	26,0	35,6	32,9	200	800	210	1,14

Highly abrasion-resistant cover:
- delivery is possible with highly abrasion-resistant cover - test accoridng to EN ISO 6945 after 1 million cycles: no measurable abrasion

your advantage:
- no hose protection necessary - hose can be used for application under oil

Do you have need for hose lines with highly abrasion-resistant cover? We are looking forward to your inquiry.

Dietzel Hydraulik GmbH
Leedenstraße 10
04626 Löbichau

Tel.: +49 (36602) 140-140

E-Mail: vertrieb@dietzel-hydraulik.de

Hydraulic hoses

3SPC

Updated at:
24.05.2022

Tube
oil resitsant synthetic rubber

Reinforcement
3 high tensile steel wire netting

Cover
synthetic caoutchouc with high temperature, ozone and abrasion resistance

Temperature
-40°C to +100°C (max. 120°)

Order no.	DN in mm	internal Ø in mm	external Ø in mm	reinforcement Ø in mm	working pressure in bar	burst pressure in bar	min.bending radius R in mm	weight in kg/m
30-06	10	9,5	21,4	17,0	500	2000	120	0,72
30-08	12	12,7	24,2	20,2	470	1880	160	0,89
30-10	16	15,9	28,1	23,8	410	1640	210	1,07
30-12	19	19,0	31,8	27,8	375	1500	260	1,32
30-16	25	25,4	39,0	34,9	310	1240	310	1,82

Dietzel Hydraulik GmbH
Leedenstraße 10
04626 Löbichau

Tel.: +49 (36602) 140-140

E-Mail: vertrieb@dietzel-hydraulik.de

Hydraulic hoses

4 SP

Updated at:
24.05.2022

Tube
oil resistant syntetic rubber

Reinforcement
4 high tensile steel spirals

Cover
synthetic rubber with high temperature, ozone and abrasion resistance

Temperature
-40°C to +100°C

Standard
DIN EN 856; SAE 100 R9R

Order no.	DN in mm	internal Ø in mm	external Ø in mm	reinforcement Ø in mm	working pressure in bar	burst pressure in bar	min.bending radius R in mm	weight in kg/m
40-04	6	6,4	17,9	14,7	450	1800	150	0,60
40-06	10	9,5	21,4	17,5	445	1780	180	0,80
40-08	12	12,7	24,6	20,2	415	1660	230	0,95
40-10	16	15,9	28,2	23,8	350	1400	250	1,10

Highly abrasion-resistant cover:
- delivery is possible with highly abrasion-resistant cover - test accoridng to EN ISO 6945 after 1 million cycles: no measurable abrasion

your advantage:
- no hose protection necessary - hose can be used for application under oil

Do you have need for hose lines with highly abrasion-resistant cover? We are looking forward to your inquiry.

Dietzel Hydraulik GmbH
Leedenstraße 10
04626 Löbichau

Tel.: +49 (36602) 140-140

E-Mail: vertrieb@dietzel-hydraulik.de

Hydraulic hoses

4 SH

Updated at:
24.05.2022

Tube
oil resistant syntetic rubber

Reinforcement
4 high tensile steel spirals

Cover
synthetic rubber with high temperature, ozone and abrasion resistance

Temperature
-40°C to +100°C

Standard
DIN EN 856

Order no.	DN in mm	internal Ø in mm	external Ø in mm	reinforcement Ø in mm	working pressure in bar	burst pressure in bar	min.bending radius R in mm	weight in kg/m
44-10	16	16,4	28,7	25,0	450	1800	250	1,11
44-12	19	19,0	32,0	28,2	420	1680	280	1,55
44-16	25	25,4	38,0	35,0	380	1520	340	2,15
44-20	31	32,0	45,0	42,0	350	1400	460	2,51
44-24	38	39,0	53,0	49,0	290	1160	560	3,33
44-32	51	50,8	68,0	63,0	250	1000	700	4,60

Highly abrasion-resistant cover:
- delivery is possible with highly abrasion-resistant cover - test accoridng to EN ISO 6945 after 1 million cycles: no measurable abrasion

your advantage:
- no hose protection necessary - hose can be used for application under oil

Do you have need for hose lines with highly abrasion-resistant cover? We are looking forward to your inquiry.

Dietzel Hydraulik GmbH
Leedenstraße 10
04626 Löbichau

Tel.: +49 (36602) 140-140

E-Mail: vertrieb@dietzel-hydraulik.de

Hydraulic hoses

R13

Updated at:
24.05.2022

Tube
oil resistant syntetic rubber

Reinforcement
6 high tensile steel spirals

Covering
synthetic rubber with high temperature, ozone and abrasion resistance

Temperature
-40°C to +120°C

Standard
DIN EN 856; SAE 100 R13

Order no.	DN in mm	internal Ø in mm	external Ø in mm	reinforcement Ø in mm	working pressure in bar	burst pressure in bar	min.bending radius R in mm	weight in kg/m
66-32	51	50,8	71,6	68,2	345	1380	630	6,51

Dietzel Hydraulik GmbH
Leedenstraße 10
04626 Löbichau

Tel.: +49 (36602) 140-140

E-Mail: vertrieb@dietzel-hydraulik.de

Hydraulic hoses

R15

Updated at:
24.05.2022

Tube
oil resistant syntetic rubber

Reinforcement
4 high tensile steel spirals up to DN 32, DN 40 with 6 spirals

Covering
synthetic rubber with high temperature, ozone and abrasion resistance

Temperature
-40°C to +120°C

Standard
SAE 100 R15

Order no.	DN in mm	internal Ø in mm	external Ø in mm	reinforcement Ø in mm	working pressure in bar	burst pressure in bar	min.bending radius R in mm	weight in kg/m
44-12	19	19,0	32,0	28,2	420	1680	280	1,55
86-16	25	25,4	38,4	35,1	420	1680	330	2,15
86-20	31	31,8	50,0	49,3	420	1680	445	3,98
86-24	38	38,1	57,3	54,0	420	1680	530	5,00

Dietzel Hydraulik GmbH
Leedenstraße 10
04626 Löbichau

Tel.: +49 (36602) 140-140

E-Mail: vertrieb@dietzel-hydraulik.de

Hydraulic hoses

6SP 560 / 525 bar

Updated at:
24.05.2022

Tube
oil resistant syntetic rubber

Reinforcement
4 high tensile steel spirals up to 32, DN 40 with 6 spirals

Covering
synthetic rubber with high temperature, ozone and abrasion resistance

Temperature
-40°C to +121°C

Order no.	DN in mm	internal Ø in mm	external Ø max in mm	reinforcement Ø max in mm	working pressure in bar	burst pressure in bar	min.bending radius R in mm	weight in kg/m
88-12-4S	19	19,4	32,5	29,4	560	2240	270	1,78
88-16-4S	25	25,7	40,2	37,2	560	2240	300	2,48
88-20	31	32,0	51,2	48,4	525	2100	420	3,59

Dietzel Hydraulik GmbH
Leedenstraße 10
04626 Löbichau

Tel.: +49 (36602) 140-140

E-Mail: vertrieb@dietzel-hydraulik.de

Hydraulic hoses

PTFE Hose with Nobel - steel netting

Updated at:
24.05.2022

Tube
white Teflon ® (PTFE)

Reinforcement
noble-steel netting

Temperature
-70°C to +260°C

Order no.	DN in mm	internal Ø min/ max in mm	thickness PTFE-core in mm	external Ø min/ max in mm	working pressure at 20° in bar	burst pressure at 20° in bar	min. bending radius R in mm	weight in kg/m
R115-03	5	4,8 / 5,4	0,9	7,5 / 8,6	264	793	64	0,094
R115-04	6	6,4 / 7,0	0,8	8,8 / 9,9	224	672	76	0,092
R115-05	8	8,1 / 8,7	0,6	10,5 / 11,6	207	621	102	0,141
R115-06	10	9,9 / 10,6	0,9	12,8 / 14,1	183	552	133	0,148
R115-08	12	13,1 / 13,4	0,9	15,9 / 17,2	161	483	152	0,249
R115-10	16	16,1 / 17,1	0,9	18,9 / 20,6	114	345	178	0,290
R115-12	20	19,3 / 20,3	0,9	22,1 / 23,8	103	310	203	0,339
R115-16	25	25,6 / 26,6	0,9	28,4 / 30,1	80	241	305	0,461

Dietzel Hydraulik GmbH
Leedenstraße 10
04626 Löbichau

Tel.: +49 (36602) 140-140

E-Mail: vertrieb@dietzel-hydraulik.de

Hydraulic hoses

Convoluted PTFE hose

Updated at:
24.05.2022

Tube
flach gewellt

Reinforcement
Stainless steel braid AISI 304

Temperature
-70°C to +260°C

Order no.	DN in mm	internal Ø min/ max in mm	external Ø min/ max in mm	working pressure at 20° in bar	burst pressure at 20° in bar	min. bending radius R in mm	weight in kg/m
R272-04	6	6,0 / 6,5	9,1 / 9,7	172	517	20	0,177
R272-05	8	7,8 / 8,3	12,2 / 12,7	100	400	25	0,195
R272-06	10	9,0 / 10,0	13,0 / 14,0	138	414	25	0,212
R272-08	12	12,5 / 13,0	18,2 / 19,2	103	310	25	0,303
R272-10	16	15,4 / 16,4	21,6 / 22,6	83	248	55	0,631
R272-12	20	18,5 / 19,6	24,0 / 25,3	69	207	65	0,430
R272-16	25	32,1 / 33,7	32,1 / 33,7	46	138	90	0,653
R272-20	32	32,0 / 32,5	40,2 / 41,2	34	103	125	0,750
R272-24	40	39,1 / 39,6	49,0 / 49,5	30	90	160	0,800
R272-32	50	49,9 / 50,9	59,2 / 60,2	23	70	200	0,950

Dietzel Hydraulik GmbH
Leedenstraße 10
04626 Löbichau

Tel.: +49 (36602) 140-140

E-Mail: vertrieb@dietzel-hydraulik.de

Hydraulic hoses
MTH1

Updated at:
24.05.2022

Tube
Thermoplastic

Reinforcement
1 wire braid

Cover
Polyurethan

Temperature
-40°C to +100°C max. working temperature of air, water and fluids containing water: 65°C

Order no.	DN in mm	internal Ø in mm	external Ø in mm	working pressure at 20° in bar	burst pressure at 20° in bar	min.bending radius R in mm	weight in kg/m
TPP1-04PU	6	6,4	11,9	300	1200	40	0,170
TPP1-05PU	8	8,0	14,0	240	960	50	0,221
TPP1-06PU	10	9,5	16,0	225	900	60	0,260
TPP1-08PU	12	13,0	20,5	175	700	75	0,390
TPP1-10PU	16	16,3	23,3	150	600	110	0,412
TPP1-12PU	19	19,2	25,0	130	520	150	0,454
TPP1-16PU	25	25,6	32,5	105	420	185	0,618

Dietzel Hydraulik GmbH
Leedenstraße 10
04626 Löbichau

Tel.: +49 (36602) 140-140

E-Mail: vertrieb@dietzel-hydraulik.de

Hydraulic hoses

FLEXbase (14A)

Updated at:
24.05.2023

Tube
Black smooth synthetic rubber, conductive, resistant to mineral oils and fuels with max. 50% aromatic content

Reinforcement
High tensile textile plies and helix wire embedded

Cover
Black, smooth rubber, abrasion, oil, fuel, ozone and weather resistant

Temperature
-40°C to 100°C

Order no.	DN in mm	DN in inch	internal Ø in mm	Tolerance internal Ø in mm	external Ø in mm	negative pressure	working pressure	burst pressure	min. bending radius R in mm	weight in kg/m
14A-12	19	3/4	19	±0,8	29	-0,8	21	84	76	0,6
14A-16	25	1	25	±0,8	35	-0,8	17	68	100	0,8
14A-20	31	1 1/4	32	±1,2	42	-0,8	14	56	128	0,9
14A-24	38	1 1/2	38	±1,2	48	-0,8	10	42	150	1,0
14A-32	51	2	51	±1,6	61	-0,8	10	30	204	1,3
14A-36	60	2 3/8	60	±1,6	72	-0,8	10	30	240	2,0
14A-40	63	2 1/2	63	±1,6	75	-0,8	10	30	252	2,1
14A-48	76	3	76	±1,6	88	-0,8	10	30	304	2,5
14A-56	90	3 1/2	89	±1,6	104	-0,8	10	30	360	3,0
14A-64	102	4	102	±1,6	116	-0,8	10	30	408	3,4
14A-80	127	5	127	±1,6	145	-0,8	10	30	508	5,8
14A-96	152	6	152	±1,6	170	-0,8	10	30	608	7,1

Dietzel Hydraulik GmbH
Leedenstraße 10
04626 Löbichau

Tel.: +49 (36602) 140-140

E-Mail: vertrieb@dietzel-hydraulik.de

Hydraulic hoses

FLEXtreme (17A)

Updated at:
24.05.2023

Tube
Black smooth synthetic rubber, conductive

Reinforcement
High tensile textile plies and helix wires embedded

Cover
Black, smooth rubber, abrasion, oil, fuel, ozone and weather resistant

Temperature
-40° up to 100°C

Order no.	DN in mm	DN in inch	internal Ø in mm	Tolerance internal Ø in mm	external Ø in mm	negative pressure	working pressure	burst pressure	min. bending radius R in mm	weight in kg/m
17A-12	19	3/4	19	±0,8	29	-1	25	75	38	0,58
17A-16	25	1	25	±0,8	35	-1	20	60	50	0,75
17A-20	31	1 1/4	32	±1,2	42	-1	17	51	64	0,92
17A-24	38	1 1/2	38	±1,2	48	-1	10	30	76	1,07
17A-32	51	2	51	±1,6	61	-1	10	30	102	1,39
17A-36	60	2 3/8	60	±1,6	72	-1	10	30	120	2,10
17A-40	63	2 1/2	63	±1,6	75	-1	10	30	126	2,10
17A-48	76	3	76	±1,6	88	-1	7	20	152	2,60
17A-56	90	3 1/2	90	±1,6	102	-1	7	20	180	3,04
17A-64	102	4	102	±1,6	116	-1	7	20	204	3,41
17A-80	127	5	127	±1,6	143	-0,9	7	20	254	5,53
17A-96	152	6	152	±1,6	168	-0,9	7	20	304	6,81

Dietzel Hydraulik GmbH
Leedenstraße 10
04626 Löbichau

Tel.: +49 (36602) 140-140

E-Mail: vertrieb@dietzel-hydraulik.de

Hydraulic hoses

Kara

Updated at:
24.05.2022

Tube
NBR smooth

Reinforcement
Texil layers, 1spring steel spiral

Cover
CR - Quality (oil- and weather resistant)

Temperature
-40°C up to 100°C

Order no.	DN in mm	inch	internal Ø in mm	external Ø in mm	negative pressure in bar	working pressure in bar	burst pressure in bar	min.bending radius R in mm	weight in kg/m
15-24	38	1 1/2	38,1	53	0,8	25	75	255	1,540
15-32	51	2	50,9	67	0,8	25	75	300	2,515
15-40	63	2 1/2	64,0	82	0,8	25	75	420	3,080
15-48	76	3	76,5	95	0,8	25	75	530	4,270
15-64	102	4	102	125	0,8	25	75	770	6,000

Dietzel Hydraulik GmbH
Leedenstraße 10
04626 Löbichau

Tel.: +49 (36602) 140-140

E-Mail: vertrieb@dietzel-hydraulik.de

Hydraulic hoses

Low pressure Superconductor

Updated at:
24.05.2022

Tube
NBR smooth

Reinforcement
2 textile braids and embedded non-kinking steel helix in the conductive layer

Cover
CR black, electrically dissipative

Temperature
-30°C up 90°C (temporarily up 110°C)

Order no.	DN in mm	internal Ø in mm	external Ø in mm	working pressure in bar	burst pressure in bar	min.bending radius R in mm	weight in kg/m
TW-40	63	63	78	16	64	160	2,7
TW-48	75	75	90	16	64	180	3,3
TW-64	100	100	116	16	64	250	4,7
TW-80	125	125	145	16	56	350	7,6
TW-96	150	150	172	16	56	500	9,7
TW-128	200	200	224	16	56	1000	14,9

Dietzel Hydraulik GmbH
Leedenstraße 10
04626 Löbichau

Tel.: +49 (36602) 140-140

E-Mail: vertrieb@dietzel-hydraulik.de

Hydraulic hoses

Hose bending protection

Updated at:
24.05.2022

Order no.	internal Ø in mm	Length	Hose examples DN
KSF-015	14,5	120	-
KSF-001	18,7	150	1/2SN-4SP DN06
KSF-002	20,2	180	1/2SN DN08
KSF-003	21,7	200	1/2SN-4SP DN10
KSF-004	22,3	200	-
KSF-013	25,3	175	-
KSF-005	25,7	200	1/2SN-4SP DN12
KSF-006	29,5	220	1/2SN-4SP DN16
KSF-007	32,5	240	1/2SN DN19
KSF-008	34,6	240	4SP DN19
KSF-009	41,7	240	1/2SN-4SP DN25
KSF-010	51,5	300	1/2SN-4SP DN31

Dietzel Hydraulik GmbH
Leedenstraße 10
04626 Löbichau

Tel.: +49 (36602) 140-140

E-Mail: vertrieb@dietzel-hydraulik.de

Hydraulic hoses

Hose bending protection pipe

Updated at:
24.05.2022

Order no.	internal Ø in mm	external Ø in mm	Length	Hose examples DN
KSR-001	29,0	40	200	4 SP DN12
KSR-003	36,0	50	200	4 SP DN19
KSR-004	43,8	60	250	4 SP DN25
KSR-005	51,2	65	185	-
KSR-007	56,3	75	250	R 15 DN31
KSR-008	56,3	73	185	R 15 DN31
KSR-009	68,1	90	190	17G DN51
KSR-010	76,1	100	250	4 SP DN51
KSR-011	76,1	100	350	2 SN DN51

Dietzel Hydraulik GmbH
Leedenstraße 10
04626 Löbichau

Tel.: +49 (36602) 140-140

E-Mail: vertrieb@dietzel-hydraulik.de

Hydraulic hoses

Hose bending protection rubber

Updated at:
24.05.2022

Order no.	Hose DN	color
KSG-001	06	black
KSG-002	08	black
KSG-005	08	blue
KSG-003	10	black
KSG-006	10	blue
KSG-004	12	blue

Dietzel Hydraulik GmbH
Leedenstraße 10
04626 Löbichau

Tel.: +49 (36602) 140-140

E-Mail: vertrieb@dietzel-hydraulik.de

Hydraulic hoses

Abrasion protection spirale

Updated at:
24.05.2022

Order no.	internal Ø in mm	Hose examples DN
SSG-009	16,5	1ST DN06-08
SSG-012	18,0	1SN-2SN/ST DN06
SSG-016	20,5	1SC DN12
SSG-022	23,0	1SN-2SN/ST-4SP DN10
SSG-024	24,5	1SN DN16
SSG-028	26,0	1SN/ST-2SN/ST-4SP DN12
SSG-034	29,5	1SN/ST-4SP DN16
SSG-036	31,0	1SN-2SN DN19
SSG-039	33,5	1SN-2N/ST-4SP DN19
SSG-046	41,0	1SN-2SN/ST-4SP DN25
SSG-051	48,0	4SH DN31
SSG-055	51,5	1SN-2SN/ST-4SP DN31
SSG-059	58,5	4SH-6SP DN38
SSG-064	73,0	1SN DN51
SSG-069	85,0	6SP R13 DN 51

Dietzel Hydraulik GmbH
Leedenstraße 10
04626 Löbichau

Tel.: +49 (36602) 140-140

E-Mail: vertrieb@dietzel-hydraulik.de

Hydraulic hoses

Flat steel spiral

Updated at:
24.05.2022

Order no.	internal Ø in mm	Hose examples DN
SSG-015	19,0	1/2SN-1ST-4SP DN6
SSG-018	21,0	1/2SN-1ST DN10
SSG-023	23,0	1/2SN-1ST DN12 2ST-4SP DN10
SSG-030	26,0	1/2SN-1ST DN16 2ST-4SP DN12

Dietzel Hydraulik GmbH
Leedenstraße 10
04626 Löbichau

Tel.: +49 (36602) 140-140

E-Mail: vertrieb@dietzel-hydraulik.de

Hydraulic hoses

Protection spiral -plastic

Updated at:
24.05.2022

Order no.	internal Ø in mm	external Ø in mm	Color
SSG-003	9,6	12,0	black
SSG-006	13,4	16,0	black
SSG-011	16,0	20,0	black
SSG-020	20,6	25,0	black
SSG-032	27,0	32,0	black
SSG-146	34,6	40,0	black
SSG-048	43,2	50,0	black
SSG-058	55,6	63,0	black
SSG-062	66,2	75,0	black
SSG-067	80,2	90,0	black
SSG-073	99,0	110,0	black
SSG-147	113,2	125,0	black
SSG-148	127,0	140,0	black

Dietzel Hydraulik GmbH
Leedenstraße 10
04626 Löbichau

Tel.: +49 (36602) 140-140

E-Mail: vertrieb@dietzel-hydraulik.de

Hydraulic hoses

Fire protection hose with silicone coating

Updated at:
13.11.2024

Reinforcement
mineral fibre ISO 2078, braided textile up to DN40, knitted textile up to DN110

Cover
silicone ISO 1629/LSR

Temperature
-60°C to +300°C, short-term with fire exposure up to 1200°C, short-term partial overheating up to 1600°C

Order no.	internal Ø in mm
SSG-010	16,0
SSG-013	18,0
SSG-017	20,0
SSG-021	22,0
SSG-025	24,0
SSG-029	26,0
SSG-033	28,0
SSG-035	30,0
SSG-037	32,0
SSG-042	36,0
SSG-044	40,0
SSG-049	45,0
SSG-053	50,0
SSG-057	55,0
SSG-060	60,0
SSG-061	65,0

Dietzel Hydraulik GmbH
Leedenstraße 10
04626 Löbichau

Tel.: +49 (36602) 140-140

E-Mail: vertrieb@dietzel-hydraulik.de

Order no.	internal Ø in mm
SSG-063	70,0
SSG-065	75,0
SSG-068	80,0
SSG-070	85,0
SSG-071	90,0
SSG-074	100,0
SSG-075	110,0
SSG-076	120,0
SSG-077	125,0
SSG-078	140,0

Dietzel Hydraulik GmbH
Leedenstraße 10
04626 Löbichau

Tel.: +49 (36602) 140-140

E-Mail: vertrieb@dietzel-hydraulik.de

Hydraulic hoses

Burst protection hose

Updated at:

Hose
textile protective hose with MSHA approval

Color
black

Temperature
-40°C - + 120°C

Standard
meets the requirements of DIN EN ISO 3457 and DIN EN ISO 4413

Properties
acid, oil and solvent resistant, very high abrasion resistance

The inside diameter of the protective hose should be at least 15mm larger than the outside diameter of the hydraulic hose line. An open assembly on both sides is preferable. If fastening is required, the protective hose should only be fastened on one side. If it is necessary to fasten it on both sides, the protective hose must be divided and have a sufficient overlap at this point to ensure that the hydraulic fluid drains off in the event of the hydraulic hose line bursting.

Order no.	internal Ø in mm
SSG-128	17,0
SSG-130	23,0
SSG-131	27,0
SSG-125	31,0
SSG-132	36,0
SSG-133	39,0
SSG-149	46,0
SSG-135	55,0
SSG-151	62,0
SSG-152	78,0
SSG-153	109,0

Dietzel Hydraulik GmbH
Leedenstraße 10
04626 Löbichau

Tel.: +49 (36602) 140-140

E-Mail: vertrieb@dietzel-hydraulik.de

Order no.	internal Ø in mm
SSG-150	125,0

Dietzel Hydraulik GmbH
Leedenstraße 10
04626 Löbichau

Tel.: +49 (36602) 140-140

E-Mail: vertrieb@dietzel-hydraulik.de

Hydraulic hoses

Pricking device PVM-50

Updated at:
09.05.2023

Tube
Device for the pricking of reinforced high pressure gas pipes up to DN 51

Note
Dimensions without handle (LxWxH): 160x170x430 (mm) Power: manually by hand crank Nails: 264 per roll hardened and blued

Options
-replacement of the complete roll of tiny nails or possible -Mounting possible either on bench or clamped in a vice

Dietzel Hydraulik GmbH
Leedenstraße 10
04626 Löbichau

Tel.: +49 (36602) 140-140

E-Mail: vertrieb@dietzel-hydraulik.de

Table of Contents

AGM straight 38
DKM straight 40
DKM 45° 42
DKM 90° 44
BEL straight 46
BEL 45° 48
BEL 90° 50
CEL straight 52
CEL 45° 54
CEL 90° 56
DKL straight 58
DKL 45° 60
DKL 90° 62
DKOL straight 64
DKOL 45° 66
DKOL 90° 68
BES straight 70
BES 45° 72
BES 90° 74
CES straight 76
CES 45° 78
CES 90° 80
DKOS straight 82
DKOS 45° 84
DKOS 90° 86
AGR Cone straight 88
AGR cylindrical straight 90
DKR straight 92
DKR 45° 94
DKR 90° 96
AGJ straight 98
DKJ straight 100
DKJ 45° 102
DKJ 90° 104
ORS straight 106
ORFS straight 108
ORFS 45° 110
ORFS 90° 112

Dietzel Hydraulik GmbH
Leedenstraße 10
04626 Löbichau

Tel.: +49 (36602) 140-140

E-Mail: vertrieb@dietzel-hydraulik.de

AGN straight 114
SFL straight 116
SFL 45° 118
SFL 90° 120
SFS straight 122
SFS 45° 124
SFS 90° 126
Hose coupling 128
Banjo fitting metric 130
Banjo fitting by inches 132
Wash cleaner female Wash cleaner female 134
Wash cleaner female for pistol application 136
Wash cleaner female with axial bearing for pistol application 137
Combi NO-SKIVE (101) 138
NO-SKIVE 1SC (101 1SC) 140
Kombi SKIVE (100) 141
SKIVE 1SN (110) 142
SKIVE 2SN (120) 143
Kombi PTFE (FR272) 144
DKOL straight 145
DKOL 45° 147
DKOL 90° 149
DKOS straight 151
DKOS 45° 153
DKOS 90° 155
SFL straight 157
SFL 45° 159
SFL 90° 161
SFS straight 163
SFS 45° 165
SFS 90° 167
4SP SKIVE (440) 169
DKOS straight 170
DKOS 45° 172
DKOS 90° 174
SFL Straight 176
SFL 45° 178
SFL 90° 180
SFS Straight 182

Dietzel Hydraulik GmbH
Leedenstraße 10
04626 Löbichau

Tel.: +49 (36602) 140-140

E-Mail: vertrieb@dietzel-hydraulik.de

SFS 45° 184
SFS 90° 186
CAT flange straight 188
CAT flange 45° 190
CAT flange 90° 192
4SH SKIVE (540) 194
CES straight 195
DKOS straight 196
DKOS 45° 198
DKOS 90° 200
DKOS Hammer Drill straight 202
AGR cylindrical straight 203
DKOR straight 204
DKOR 45° 205
DKOR 90° 206
AGJ straight 207
DKJ straight 208
DKJ 45° 209
DKJ 90° 210
ORS straight 211
ORFS straight 212
ORFS 45° 213
ORFS 90° 214
AGN straight 215
SFL straight 216
SFL 45° 217
SFL 90° 218
SFS straight 219
SFS 45° 221
SFS 90° 222
4SH SKIVE (740) 224
R15 SKIVE (760) 225
R13 SKIVE (760) 226
DKOS straight 227
DKOS 45° 228
DKOS 90° 229
SFS straight 230
SFS 45° 232
SFS 90° 234

Dietzel Hydraulik GmbH
Leedenstraße 10
04626 Löbichau

Tel.: +49 (36602) 140-140

E-Mail: vertrieb@dietzel-hydraulik.de

SAE 3000 PSI flange half 236
SAE 3000 PSI solid flange 238
SAE 3000 PSI mating solid flange 240
SAE 6000 PSI flange half 242
SAE 6000 PSI solid flange 243
SAE 6000 PSI mating solid flange 244
O-ring DKOL/DKOS 246
O-ring SAE flange 248
O-ring DIN flange 250
O-ring ORS 252
O-ring DKOR 254
O-ring DIN2690 flat gasket 256
Chesse head screws 258
Hexagon bolts and nuts 260
Seamless 90° pipe bends 261

Updated at: 11.01.2023

Dietzel Hydraulik GmbH
Leedenstraße 10
04626 Löbichau

Tel.: +49 (36602) 140-140

E-Mail: vertrieb@dietzel-hydraulik.de

Pressure fittings

AGM straight

Updated at:
24.05.2022

Connection
Metric male thread with 60° inner cone LL series

Standard
DIN 3863

Application
TE / SN / SC / SN-K / PTFE flexible tubes

Material
Steel

Surface protection
Zinc-electroplated

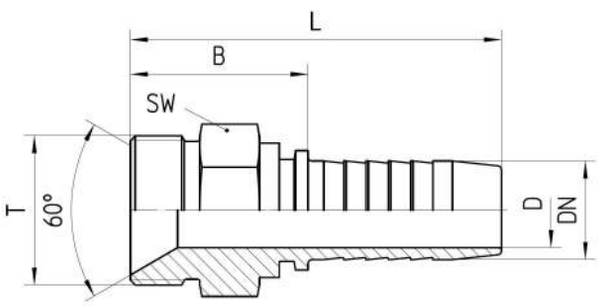

Order no.	DN in mm	T	SW in mm	min. D in mm	B±3 in mm	L±3 in mm
1.111-12-12	19	M 30x1.5	30	15,0	42	81
1.111-16-12	19	M 38x1.5	41	15,0	42	81
1.111-12-16	25	M 30x1.5	30	15,0	46	92
1.111-16-16	25	M 38x1.5	41	21,0	46	92
1.111-20-16	25	M 45x1.5	46	21,0	48	94
1.111-16-20	31	M 38x1.5	41	21,0	49	103
1.111-20-20	31	M 45x1.5	46	27,0	51	105
1.111-24-20	31	M 52x1.5	55	27,0	51	105

Dietzel Hydraulik GmbH
Leedenstraße 10
04626 Löbichau

Tel.: +49 (36602) 140-140

E-Mail: vertrieb@dietzel-hydraulik.de

Order no.	DN in mm	T	SW in mm	min. D in mm	B±3 in mm	L±3 in mm
1.111-20-24	38	M 45x1.5	46	27,0	52	109
1.111-24-24	38	M 52x1.5	55	32,0	52	109
1.111-32-24	38	M 65x2.0	65	32,0	58	115
1.111-24-32	51	M 52x1.5	55	31,0	53	128
1.111-32-32	51	M 65x2.0	65	44,5	80	155
1.111-40-32	51	M 78x2.0	80	44,5	80	155
1.111-32-36	60	M 65x2.0	65	51,0	95	175
1.111-40-36	60	M 78x2.0	80	52,0	95	175
1.111-48-36	60	M 90x2.0	90	52,0	99	179
1.111-40-48	76	M 78x2.0	80	68,0	78	153
1.111-48-48	76	M 90x2.0	90	68,0	82	157
1.111-56-48	76	M 100x2.0	100	68,0	82	157

Note
this version is also available for 4SP hoses

Ferrule
no-skive (101) // skive (100 / 110 / 120)

Dietzel Hydraulik GmbH
Leedenstraße 10
04626 Löbichau

Tel.: +49 (36602) 140-140

E-Mail: vertrieb@dietzel-hydraulik.de

Pressure fittings

DKM straight

Updated at:
24.05.2022

Connection
Sealing head 60° outside cone with nut LL series

Standard
DIN 3863

Application
TE / SN / SC / SN-K / PTFE flexible tubes

Material
Steel

Surface protection
Zinc-electroplated

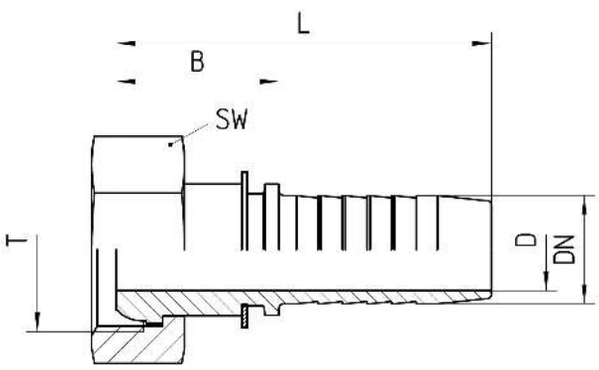

Order no.	DN in mm	T	SW in mm	min. D in mm	B±3 in mm	L±3 in mm
1.011-12-12	19	M 30x1.5	36	15,0	30	69
1.011-16-12	19	M 38x1.5	46	15,0	28	67
1.011-12-16	25	M 30x1.5	36	15,0	33	80
1.011-16-16	25	M 38x1.5	46	21,0	35	81
1.011-20-16	25	M 45x1.5	55	21,0	36	82
1.011-16-20	31	M 38x1.5	46	21,0	35	89
1.011-20-20	31	M 45x1.5	55	26,5	42	96
1.011-24-20	31	M 52x1.5	60	26,5	42	96

Dietzel Hydraulik GmbH
Leedenstraße 10
04626 Löbichau

Tel.: +49 (36602) 140-140

E-Mail: vertrieb@dietzel-hydraulik.de

Order no.	DN in mm	T	SW in mm	min. D in mm	B±3 in mm	L±3 in mm
1.011-20-24	38	M 45x1.5	55	27,0	37	94
1.011-24-24	38	M 52x1.5	60	32,8	45	102
1.011-32-24	38	M 65x2.0	75	32,0	38	96
1.011-24-32	51	M 52x1.5	60	33,0	38	113
1.011-32-32	51	M 65x2.0	75	44,5	61	136
1.011-40-32	51	M 78x2.0	90	44,5	62	137
1.011-32-36	60	M 65x2.0	75	44,5	76	156
1.011-40-36	60	M 78x2.0	90	52,0	77	157
1.011-40-40	63	M 78x2.0	90	52,0	74	154
1.011-48-36	60	M 90x2.0	100	52,0	76	156
1.011-40-48	76	M 78x2.0	90	52,8	92	167
1.011-48-48	76	M 90x2.0	100	68,0	59	134
1.011-56-48	76	M 100x2.0	110	68,0	58	133

Note
this version is also available for 4SP hoses

Ferrule
no-skive (101) // skive (100 / 110 / 120)

Options
O-ring version on request (DKOM)

Dietzel Hydraulik GmbH
Leedenstraße 10
04626 Löbichau

Tel.: +49 (36602) 140-140

E-Mail: vertrieb@dietzel-hydraulik.de

Pressure fittings

DKM 45°

Updated at:
24.05.2022

Connection
Sealing head 60° outside cone with nut LL series

Standard
DIN 3863

Application
TE / SN / SC / SN-K / PTFE flexible tubes

Material
Steel

Surface protection
Zinc-electroplated

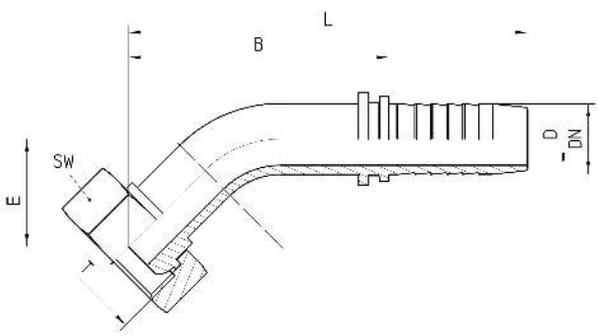

Order no.	DN in mm	T	SW in mm	min. D in mm	E±3 in mm	B±3 in mm	L±3 in mm
1.015-12-12	19	M 30x1.5	36	14,8	32	73	112
1.015-16-12	19	M 38x1.5	46	14,8	33	70	109
1.015-12-16	25	M 30x1.5	36	15,0	35	80	126
1.015-16-16	25	M 38x1.5	46	21,0	32	82	128
1.015-20-16	25	M 45x1.5	55	21,0	35	79	125
1.015-16-20	31	M 38x1.5	46	20,0	40	115	169
1.015-20-20	31	M 45x1.5	55	26,5	40	109	163
1.015-24-20	31	M 52x1.5	60	26,5	40	110	164

Dietzel Hydraulik GmbH
Leedenstraße 10
04626 Löbichau

Tel.: +49 (36602) 140-140

E-Mail: vertrieb@dietzel-hydraulik.de

Order no.	DN in mm	T	SW in mm	min. D in mm	E±3 in mm	B±3 in mm	L±3 in mm
1.015-20-24	38	M 45x1.5	55	27,0	47	114	171
1.015-24-24	38	M 52x1.5	60	32,8	49	115	172
1.015-32-24	38	M 65x2.0	75	32,8	50	117	174
1.015-24-32	51	M 52x1.5	60	30,0	54	131	206
1.015-32-32	51	M 65x2.0	75	44,5	54	131	206
1.015-40-32	51	M 78x2.0	90	44,5	51	129	204
1.015-32-36	60	M 65x2.0	75	44,5	56	158	238
1.015-40-36	60	M 78x2.0	90	52,0	54	158	238
1.015-48-36	60	M 90x2.0	100	52,0	54	159	239
1.015-40-40	63	M 78x2.0	90	52,0	53	148	228
1.015-40-48	76	M 78x2.0	90	53,0	61	158	233
1.015-48-48	76	M 90x2.0	100	68,0	53	147	222
1.015-56-48	76	M 100x2.0	110	68,0	53	147	222

Note
this version is also available for 4SP hoses

Ferrule
no-skive (101) // skive (100 / 110 / 120)

Options
O-ring version on request (DKOM)

Dietzel Hydraulik GmbH
Leedenstraße 10
04626 Löbichau

Tel.: +49 (36602) 140-140

E-Mail: vertrieb@dietzel-hydraulik.de

Pressure fittings

DKM 90°

Updated at:
24.05.2022

Connection
Sealing head 60° outside cone with nut LL series

Standard
DIN 3863

Application
TE / SN / SC / SN-K / PTFE flexible tubes

Material
Steel

Surface protection
Zinc-electroplated

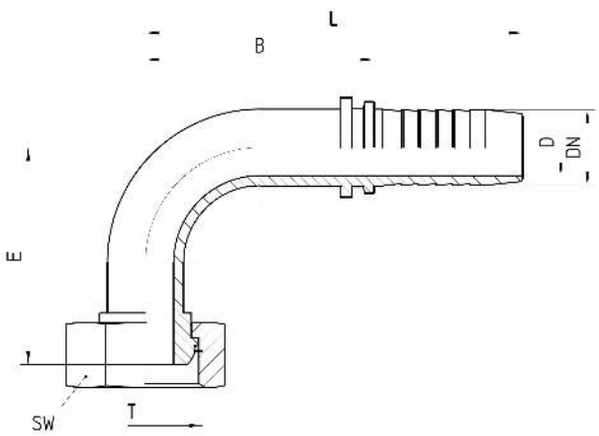

Order no.	DN in mm	T	SW in mm	min. D in mm	E±3 in mm	B±3 in mm	L±3 in mm
1.019-12-12	19	M 30x1.5	36	14,8	61	60	99
1.019-16-12	19	M 38x1.5	46	14,8	61	60	99
1.019-12-16	25	M 30x1.5	36	15,0	60	68	114
1.019-16-16	25	M 38x1.5	46	21,0	69	68	114
1.019-20-16	25	M 45x1.5	55	21,0	70	68	114
1.019-16-20	31	M 38x1.5	46	20,0	84	94	148
1.019-20-20	31	M 45x1.5	55	26,5	82	94	148
1.019-24-20	31	M 52x1.5	60	26,5	83	94	148

Dietzel Hydraulik GmbH
Leedenstraße 10
04626 Löbichau

Tel.: +49 (36602) 140-140

E-Mail: vertrieb@dietzel-hydraulik.de

Order no.	DN in mm	T	SW in mm	min. D in mm	E±3 in mm	B±3 in mm	L±3 in mm
1.019-20-24	38	M 45x1.5	55	27,0	104	105	162
1.019-24-24	38	M 52x1.5	60	32,8	101	105	162
1.019-32-24	38	M 65x2.0	75	32,8	103	105	162
1.019-24-32	51	M 52x1.5	60	33,0	114	130	205
1.019-32-32	51	M 65x2.0	75	44,5	112	130	205
1.019-40-32	51	M 78x2.0	90	44,5	117	130	205
1.019-32-36	60	M 65x2.0	75	44,5	129	173	253
1.019-40-36	60	M 78x2.0	90	52,0	129	173	253
1.019-48-36	60	M 90x2.0	100	52,0	129	173	253
1.019-40-40	63	M 78x2.0	90	52,0	128	157	237
1.019-40-48	76	M 78x2.0	90	53,0	142	150	225
1.019-48-48	76	M 90x2.0	100	68,0	131	150	225
1.019-56-48	76	M 100x2.0	100	68,0	131	150	225

Note
this version is also available for 4SP hoses

Ferrule
no-skive (101) // skive (100 / 110 / 120)

Options
O-ring version on request (DKOM)

Dietzel Hydraulik GmbH
Leedenstraße 10
04626 Löbichau

Tel.: +49 (36602) 140-140

E-Mail: vertrieb@dietzel-hydraulik.de

Pressure fittings

BEL straight

Updated at:
24.05.2022

Connection
Pipe connection for cutting ring coupling L series

Standard
ISO 8434-1

Application
TE / SN / SC / SN-K / PTFE flexible tubes

Material
Steel

Surface protection
Zinc-electroplated

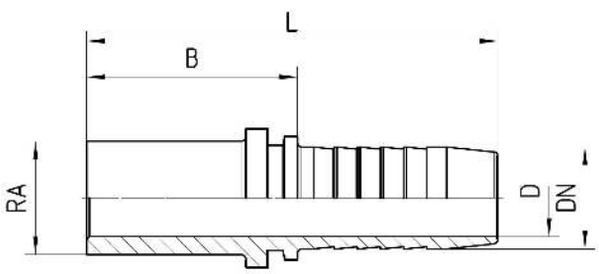

Order no.	DN in mm	RA	min. D in mm	B±3 in mm	L±3 in mm
1.103-03-04	06	6L	3,5	34	61
1.103-04-04	06	8L	4,0	34	61
1.103-05-04	06	10L	4,0	36	63
1.103-04-05	08	8L	4,0	30	57
1.103-05-05	08	10L	5,5	30	57
1.103-06-05	08	12L	5,5	32	59
1.103-05-06	10	10L	7,0	30	60
1.103-06-06	10	12L	7,0	32	62

Dietzel Hydraulik GmbH
Leedenstraße 10
04626 Löbichau

Tel.: +49 (36602) 140-140

E-Mail: vertrieb@dietzel-hydraulik.de

Order no.	DN in mm	RA	min. D in mm	B±3 in mm	L±3 in mm
1.103-08-06	10	15L	7,0	34	64
1.103-06-08	12	12L	7,0	34	65
1.103-08-08	12	15L	10,0	36	67
1.103-10-08	12	18L	10,0	39	70
1.103-10-10	16	18L	13,0	38	72
1.103-12-12	19	22L	15,0	41	80
1.103-16-16	25	28L	21,0	47	93
1.103-20-20	31	35L	27,0	47	101
1.103-24-24	38	42L	36,0	73	130

Dietzel Hydraulik GmbH
Leedenstraße 10
04626 Löbichau

Tel.: +49 (36602) 140-140

E-Mail: vertrieb@dietzel-hydraulik.de

Pressure fittings

BEL 45°

Updated at:
24.05.2022

Connection
Pipe connection for cutting ring coupling L series

Standard
ISO 8434-1

Application
TE / SN / SC / SN-K / PTFE flexible tubes

Material
Steel

Surface protection
Zinc-electroplated

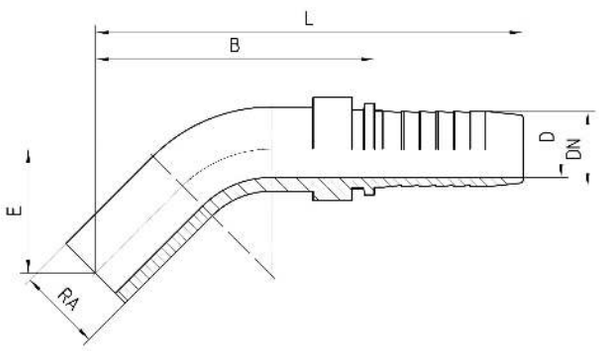

Order no.	DN in mm	RA	min. D in mm	E±3 in mm	B±3 in mm	L±3 in mm
1.105-03-04	06	6L	3,0	20,0	51	78
1.105-04-04	06	8L	4,0	20,0	53	80
1.105-05-04	06	10L	4,0	22,0	54	81
1.105-04-05	08	8L	5,0	20,0	53	80
1.105-05-05	08	10L	5,5	22,0	53	80
1.105-06-05	08	12L	5,5	22,0	57	84
1.105-05-06	10	10L	7,0	22,0	52	82
1.105-06-06	10	12L	7,0	22,0	57	87

Dietzel Hydraulik GmbH
Leedenstraße 10
04626 Löbichau

Tel.: +49 (36602) 140-140

E-Mail: vertrieb@dietzel-hydraulik.de

Order no.	DN in mm	RA	min. D in mm	E±3 in mm	B±3 in mm	L±3 in mm
1.105-08-06	10	15L	7,0	22,5	61	91
1.105-06-08	12	12L	7,0	22,0	60	91
1.105-08-08	12	15L	10,0	22,5	63	94
1.105-10-08	12	18L	10,0	31,0	77	108
1.105-10-10	16	18L	13,0	31,0	76	110
1.105-12-12	19	22L	15,0	32,0	84	123
1.105-16-16	25	28L	21,0	40,0	95	141
1.105-20-20	31	35L	27,0	34,0	104	158
1.105-24-24	38	42L	32,0	46,0	112	169

Dietzel Hydraulik GmbH
Leedenstraße 10
04626 Löbichau

Tel.: +49 (36602) 140-140

E-Mail: vertrieb@dietzel-hydraulik.de

Pressure fittings

BEL 90°

Updated at:
24.05.2022

Connection
Pipe connection for cutting ring coupling L series

Standard
ISO 8434-1

Application
TE / SN / SC / SN-K / PTFE flexible tubes

Material
Steel

Surface protection
Zinc-electroplated

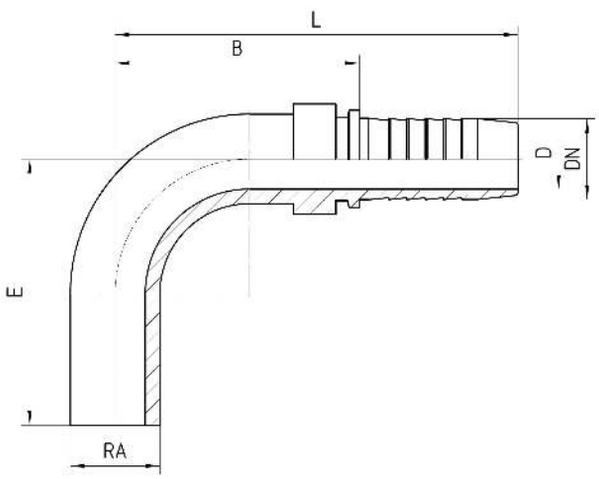

Order no.	DN in mm	RA	min. D in mm	E±3 in mm	B±3 in mm	L±3 in mm
1.109-03-04	06	6L	3,0	35	36	63
1.109-04-04	06	8L	4,0	38	38	65
1.109-05-04	06	10L	4,0	40	40	67
1.109-04-05	08	8L	5,0	35	42	69
1.109-05-05	08	10L	5,5	40	41	68
1.109-06-05	08	12L	5,5	42	47	74
1.109-05-06	10	10L	7,0	40	38	68

Dietzel Hydraulik GmbH
Leedenstraße 10
04626 Löbichau

Tel.: +49 (36602) 140-140

E-Mail: vertrieb@dietzel-hydraulik.de

Order no.	DN in mm	RA	min. D in mm	E±3 in mm	B±3 in mm	L±3 in mm
1.109-06-06	10	12L	7,0	42	45	75
1.109-08-06	10	15L	7,0	45	51	81
1.109-06-08	12	12L	7,0	42	48	79
1.109-08-08	12	15L	10,0	45	54	85
1.109-10-08	12	18L	10,0	60	62	93
1.109-10-10	16	18L	13,0	60	61	95
1.109-12-12	19	22L	15,0	65	71	110
1.109-16-16	25	28L	21,0	80	79	125
1.109-20-20	31	35L	27.0	90	91	145
1.109-24-24	38	42L	32.0	100	101	158

Dietzel Hydraulik GmbH
Leedenstraße 10
04626 Löbichau

Tel.: +49 (36602) 140-140

E-Mail: vertrieb@dietzel-hydraulik.de

Pressure fittings

CEL straight

Updated at:
24.05.2022

Connection
Metric male thread 24° with inner cone and pipe connection L series

Standard
ISO 8434-1

Application
TE / SN / SC / SN-K / PTFE flexible tubes

Material
Steel

Surface protection
Zinc-electroplated

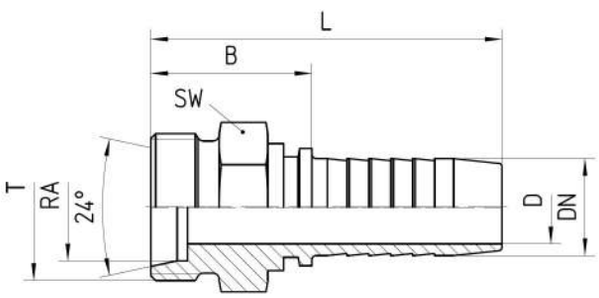

Order no.	DN in mm	RA	T	SW in mm	min. D in mm	B±3 in mm	L±3 in mm
1.170-03-04	06	6L	M 12x1.5	14	4,0	23	51
1.170-04-04	06	8L	M 14x1.5	14	4,0	22	50
1.170-05-04	06	10L	M 16x1.5	17	4,0	23	51
1.170-04-05	08	8L	M 14x1.5	14	5,5	30	57
1.170-05-05	08	10L	M 16x1.5	17	5,5	24	52
1.170-06-05	08	12L	M 18x1.5	19	5,5	24	52
1.170-05-06	10	10L	M 16x1.5	17	7,0	24	54
1.170-06-06	10	12L	M 18x1.5	19	7,0	27	57

Dietzel Hydraulik GmbH
Leedenstraße 10
04626 Löbichau

Tel.: +49 (36602) 140-140

E-Mail: vertrieb@dietzel-hydraulik.de

Order no.	DN in mm	RA	T	SW in mm	min. D in mm	B±3 in mm	L±3 in mm
1.170-08-06	10	15L	M 22x1.5	22	7,0	25	55
1.170-06-08	12	12L	M 18x1.5	19	7,0	33	64
1.170-08-08	12	15L	M 22x1.5	22	10,0	30	61
1.170-10-08	12	18L	M 26x1.5	27	10,0	33	64
1.170-08-10	16	15L	M 22x1.5	22	13,0	36	70
1.170-10-10	16	18L	M 26x1.5	27	13,0	30	64
1.170-12-10	16	22L	M 30x2.0	30	13,0	37	71
1.170-10-12	19	18L	M 26x1.5	27	15,0	37	76
1.170-12-12	19	22L	M 30x2.0	32	15,0	33	72
1.170-16-12	19	28L	M 36x2.0	36	15,0	39	78
1.170-12-16	25	22L	M 30x2.0	30	15,0	42	88
1.170-16-16	25	28L	M 36x2.0	36	21,0	34	81
1.170-20-16	25	35L	M 45x2.0	46	21,0	44	90
1.170-16-20	31	28L	M 36x2.0	36	21,0	45	100
1.170-20-20	31	35L	M 45x2.0	46	27,0	38	93
1.170-20-24	38	35L	M 45x2.0	46	27,0	47	105
1.170-24-24	38	42L	M 52x2.0	55	32,0	41	99

Dietzel Hydraulik GmbH
Leedenstraße 10
04626 Löbichau

Tel.: +49 (36602) 140-140

E-Mail: vertrieb@dietzel-hydraulik.de

Pressure fittings

CEL 45°

Updated at:
24.05.2022

Connection
Metric male thread 24° with inner cone and pipe connection L series

Standard
ISO 8434-1

Application
TE / SN / SC / SN-K / PTFE flexible tubes

Material
Steel

Surface protection
Zinc-electroplated

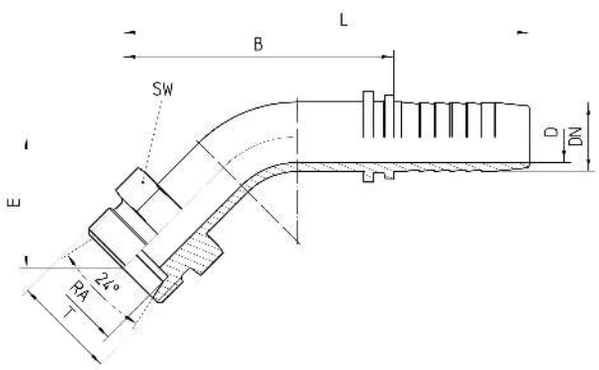

Order no.	DN in mm	RA	T	SW in mm	min. D in mm	E±3 in mm	B±3 in mm	L±3 in mm
1.175-03-04	06	6L	M 12x1.5	14	4,0	17	41	68
1.175-04-04	06	8L	M 14x1.5	14	4,0	19	40	67
1.175-05-04	06	10L	M 16x1.5	17	4,0	17	40	67
1.175-04-05	08	8L	M 14x1.5	14	5,5	17	46	73
1.175-05-05	08	10L	M 16x1.5	17	5,5	20	44	71
1.175-06-05	08	12L	M 18x1.5	19	5,5	20	45	72
1.175-05-06	10	10L	M 16x1.5	17	7,0	20	43	73
1.175-06-06	10	12L	M 18x1.5	19	7,0	20	43	73

Dietzel Hydraulik GmbH
Leedenstraße 10
04626 Löbichau

Tel.: +49 (36602) 140-140

E-Mail: vertrieb@dietzel-hydraulik.de

Order no.	DN in mm	RA	T	SW in mm	min. D in mm	E±3 in mm	B±3 in mm	L±3 in mm
1.175-08-06	10	15L	M 22x1.5	22	7,0	21	42	72
1.175-06-08	12	12L	M 18x1.5	19	10,0	23	57	88
1.175-08-08	12	15L	M 22x1.5	22	10,0	26	53	84
1.175-10-08	12	18L	M 26x1.5	27	10,0	25	54	85
1.175-08-10	16	15L	M 22x1.5	22	12,6	32	68	102
1.175-10-10	16	18L	M 26x1.5	27	12,6	30	68	102
1.175-12-10	16	22L	M 30x2.0	30	12,6	32	69	103
1.175-10-12	19	18L	M 26x1.5	27	14,8	36	80	119
1.175-12-12	19	22L	M 30x2.0	32	14,8	39	80	119
1.175-16-12	19	28L	M 36x2.0	36	14,8	38	80	119
1.175-12-16	25	22L	M 30x2.0	30	16,6	38	86	132
1.175-16-16	25	28L	M 36x2.0	36	21,1	34	83	129
1.175-20-16	25	35L	M 45x2.0	46	21,1	38	86	132
1.175-16-20	31	28L	M 36x2.0	36	22,5	47	116	170
1.175-20-20	31	35L	M 45x2.0	46	26,5	47	116	170
1.175-20-24	38	35L	M 45x2.0	46	29,0	50	120	177
1.175-24-24	38	42L	M 52x2.0	55	32,8	52	121	178

Dietzel Hydraulik GmbH
Leedenstraße 10
04626 Löbichau

Tel.: +49 (36602) 140-140

E-Mail: vertrieb@dietzel-hydraulik.de

Pressure fittings

CEL 90°

Updated at:
24.05.2022

Connection
Metric male thread 24° with inner cone and pipe connection L series

Standard
ISO 8434-1

Application
TE / SN / SC / SN-K / PTFE flexible tubes

Material
Steel

Surface protection
Zinc-electroplated

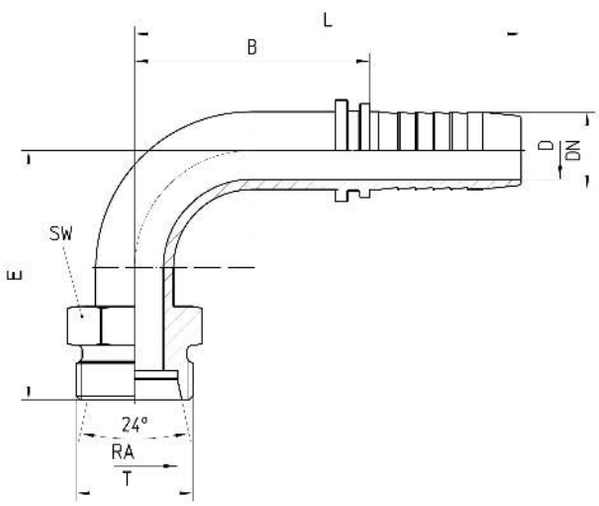

Order no.	DN in mm	RA	T	SW in mm	min. D in mm	E±3 mm	B±3 in mm	L±3 in mm
1.179-03-04	06	6L	M 12x1.5	14	4,0	33	26	53
1.179-04-04	06	8L	M 14x1.5	14	4,0	32	26	53
1.179-05-04	06	10L	M 16x1.5	17	4,0	33	26	53
1.179-04-05	08	8L	M 14x1.5	14	5,5	33	30	57
1.179-05-05	08	10L	M 16x1.5	17	5,5	34	30	57
1.179-06-05	08	12L	M 18x1.5	19	5,5	34	30	57

Dietzel Hydraulik GmbH
Leedenstraße 10
04626 Löbichau

Tel.: +49 (36602) 140-140

E-Mail: vertrieb@dietzel-hydraulik.de

Order no.	DN in mm	RA	T	SW in mm	min. D in mm	E±3 mm	B±3 in mm	L±3 in mm
1.179-05-06	10	10L	M 16x1.5	17	7,0	37	30	60
1.179-06-06	10	12L	M 18x1.5	19	7,0	34	32	62
1.179-08-06	10	15L	M 22x1.5	22	7,0	36	32	62
1.179-06-08	12	12L	M 18x1.5	19	10,0	48	42	73
1.179-08-08	12	15L	M 22x1.5	22	10,0	48	40	71
1.179-10-08	12	18L	M 26x1.5	27	10,0	49	42	73
1.179-08-10	16	15L	M 22x1.5	22	12,6	58	52	86
1.179-10-10	16	18L	M 26x1.5	27	12,6	56	52	86
1.179-12-10	16	22L	M 30x2.0	30	12,6	60	52	86
1.179-10-12	19	18L	M 26x1.5	27	14,8	69	60	99
1.179-12-12	19	22L	M 30x2.0	32	14,8	68	61	100
1.179-16-12	19	28L	M 36x2.0	36	14,8	70	60	99
1.179-12-16	25	22L	M 30x2.0	30	16,6	76	68	114
1.179-16-16	25	28L	M 36x2.0	36	21,1	73	68	114
1.179-20-16	25	35L	M 45x2.0	46	21,1	65	68	114
1.179-16-20	31	28L	M 36x2.0	36	22,5	90	94	148
1.179-20-20	31	35L	M 45x2.0	46	26,5	90	94	148
1.179-20-24	38	35L	M 45x2.0	46	29,0	103	105	162
1.179-24-24	38	42L	M 52x2.0	55	32,8	87	105	162

Dietzel Hydraulik GmbH
Leedenstraße 10
04626 Löbichau

Tel.: +49 (36602) 140-140

E-Mail: vertrieb@dietzel-hydraulik.de

Pressure fittings

DKL straight

Updated at:
24.05.2022

Connection
Universal sealing head 23° outside cone with metric nut L series

Standard
ISO 8434-1

Application
TE / SN / SC / SN-K / PTFE flexible tubes

Material
Steel

Surface protection
Zinc-electroplated

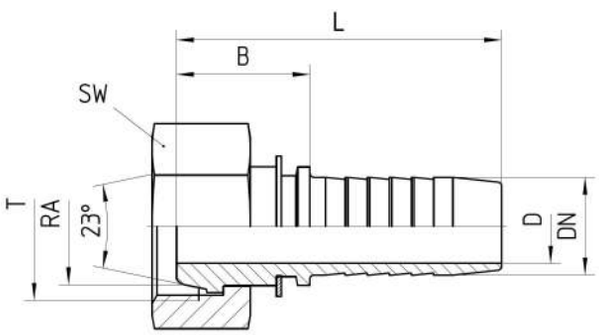

Order no.	DN in mm	RA	T	SW in mm	min. D in mm	B±3 in mm	L±3 in mm
1.041-03-04	06	6L	M 12x1.5	14	3,5	24	51
1.041-04-04	06	8L	M 14x1.5	17	4,0	20	47
1.041-05-04	06	10L	M 16x1.5	19	4,0	20	48
1.041-04-05	08	8L	M 14x1.5	17	4,0	24	51
1.041-05-05	08	10L	M 16x1.5	19	5,5	20	48
1.041-06-05	08	12L	M 18x1.5	22	5,5	20	48
1.041-05-06	10	10L	M 16x1.5	19	7,0	25	55
1.041-06-06	10	12L	M 18x1.5	22	7,0	21	51

Dietzel Hydraulik GmbH
Leedenstraße 10
04626 Löbichau

Tel.: +49 (36602) 140-140

E-Mail: vertrieb@dietzel-hydraulik.de

Order no.	DN in mm	RA	T	SW in mm	min. D in mm	B±3 in mm	L±3 in mm
1.041-08-06	10	15L	M 22x1.5	27	7,0	22	52
1.041-06-08	12	12L	M 18x1.5	22	7,0	28	59
1.041-08-08	12	15L	M 22x1.5	27	10,0	23	54
1.041-10-08	12	18L	M 26x1.5	32	10,0	26	57
1.041-08-10	16	15L	M 22x1.5	27	10,0	28	62
1.041-10-10	16	18L	M 26x1.5	32	13,0	25	59

Dietzel Hydraulik GmbH
Leedenstraße 10
04626 Löbichau

Tel.: +49 (36602) 140-140

E-Mail: vertrieb@dietzel-hydraulik.de

Pressure fittings

DKL 45°

Updated at:
24.05.2022

Connection
Universal sealing head 23° outside cone with metric nut L series

Standard
ISO 8434-1

Application
TE / SN / SC / SN-K / PTFE flexible tubes

Material
Steel

Surface protection
Zinc-electroplated

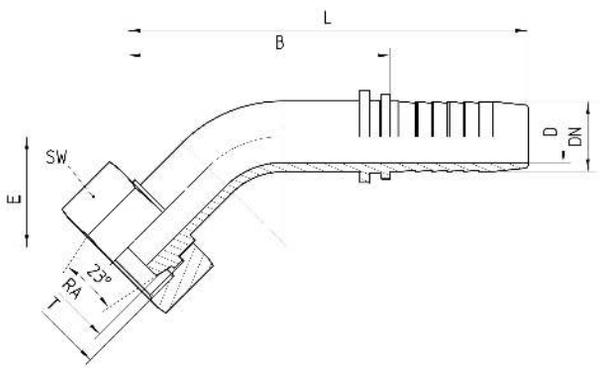

Order no.	DN in mm	RA	T	SW in mm	min. D in mm	E±3 in mm	B±3 in mm	L±3 in mm
1.045-03-04	06	6L	M 12x1.5	14	4,0	16	35	62
1.045-04-04	06	8L	M 14x1.5	17	4,0	16	35	62
1.045-05-04	06	10L	M 16x1.5	19	4,0	17	36	63
1.045-04-05	08	8L	M 14x1.5	17	4,0	18	38	65
1.045-05-05	08	10L	M 16x1.5	19	5,5	18	38	65
1.045-06-05	08	12L	M 18x1.5	22	5,5	18	39	66
1.045-05-06	10	10L	M 16x1.5	19	7,0	18	37	67
1.045-06-06	10	12L	M 18x1.5	22	7,0	18	37	67

Dietzel Hydraulik GmbH
Leedenstraße 10
04626 Löbichau

Tel.: +49 (36602) 140-140

E-Mail: vertrieb@dietzel-hydraulik.de

Order no.	DN in mm	RA	T	SW in mm	min. D in mm	E±3 in mm	B±3 in mm	L±3 in mm
1.045-08-06	10	15L	M 22x1.5	27	7,0	18	36	66
1.045-06-08	12	12L	M 18x1.5	22	9,0	21	52	83
1.045-08-08	12	15L	M 22x1.5	27	10,0	20	51	82
1.045-10-08	12	18L	M 26x1.5	32	10,0	22	50	81
1.045-08-10	16	15L	M 22x1.5	27	10,0	27	63	97
1.045-10-10	16	18L	M 26x1.5	32	12,6	26	62	96

Dietzel Hydraulik GmbH
Leedenstraße 10
04626 Löbichau

Tel.: +49 (36602) 140-140

E-Mail: vertrieb@dietzel-hydraulik.de

Pressure fittings

DKL 90°

Updated at:
24.05.2022

Connection
Universal sealing head 23° outside cone with metric nut L series

Standard
ISO 8434-1

Application
TE / SN / SC / SN-K / PTFE flexible tubes

Material
Steel

Surface protection
Zinc-electroplated

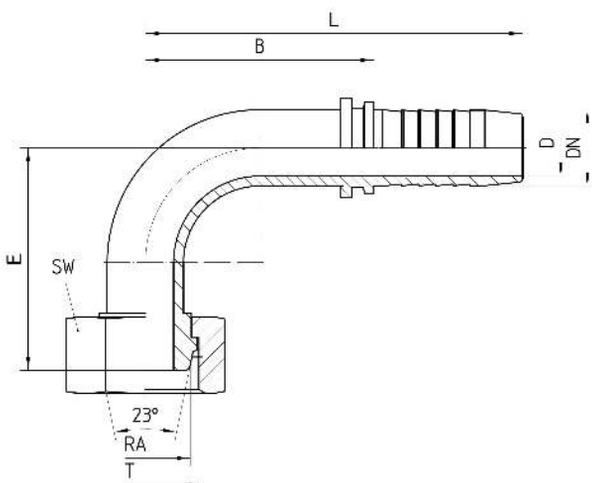

Order no.	DN in mm	RA	T	SW in mm	min. D in mm	E±3 in mm	B±3 in mm	L±3 in mm
1.049-03-04	06	6L	M 12x1.5	14	4,0	28	26	53
1.049-04-04	06	8L	M 14x1.5	17	4,0	28	26	53
1.049-05-04	06	10L	M 16x1.5	19	4,0	29	26	53
1.049-04-05	08	8L	M 14x1.5	17	4,0	31	30	57
1.049-05-05	08	10L	M 16x1.5	19	5,5	32	30	57
1.049-06-05	08	12L	M 18x1.5	22	5,5	32	30	57
1.049-05-06	10	10L	M 16x1.5	19	7,0	32	30	60

Dietzel Hydraulik GmbH
Leedenstraße 10
04626 Löbichau

Tel.: +49 (36602) 140-140

E-Mail: vertrieb@dietzel-hydraulik.de

Order no.	DN in mm	RA	T	SW in mm	min. D in mm	E±3 in mm	B±3 in mm	L±3 in mm
1.049-06-06	10	12L	M 18x1.5	22	7,0	31	30	60
1.049-08-06	10	15L	M 22x1.5	27	7,0	30	30	60
1.049-06-08	12	12L	M 18x1.5	22	9,0	42	42	73
1.049-08-08	12	15L	M 22x1.5	27	10,0	40	42	73
1.049-10-08	12	18L	M 26x1.5	32	10,0	43	42	73
1.049-08-10	16	15L	M 22x1.5	27	10,0	53	52	86
1.049-10-10	16	18L	M 26x1.5	32	12,6	49	52	86

Dietzel Hydraulik GmbH
Leedenstraße 10
04626 Löbichau

Tel.: +49 (36602) 140-140

E-Mail: vertrieb@dietzel-hydraulik.de

Pressure fittings

DKOL straight

Updated at:
24.05.2022

Connection
Sealing head 24° outside cone O-ring sealing with metric nut L series

Standard
ISO 8434-1

Application
TE / SN / SC / SN-K / PTFE flexible tubes

Material
Steel

Surface protection
Zinc-electroplated

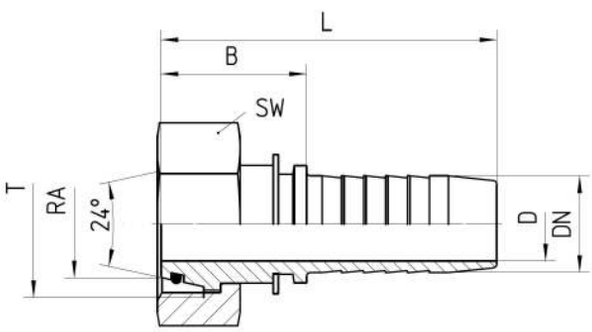

Order no.	DN in mm	RA	T	SW in mm	min. D in mm	B±3 in mm	L±3 in mm
1.051-03-04	06	6L	M 12x1.5	14	2,8	25	52
1.051-04-04	06	8L	M 14x1.5	17	4,0	22	50
1.051-05-04	06	10L	M 16x1.5	19	4,0	23	51
1.051-06-04	06	12L	M 18x1.5	22	4,0	23	51
1.051-03-05	08	6L	M 12x1.5	14	2,8	25	52
1.051-04-05	08	8L	M 14x1.5	17	4,0	26	53
1.051-05-05	08	10L	M 16x1.5	19	5,5	23	50
1.051-06-05	08	12L	M 18x1.5	22	5,5	23	50

Dietzel Hydraulik GmbH
Leedenstraße 10
04626 Löbichau

Tel.: +49 (36602) 140-140

E-Mail: vertrieb@dietzel-hydraulik.de

Order no.	DN in mm	RA	T	SW in mm	min. D in mm	B±3 in mm	L±3 in mm
1.051-04-06	10	8L	M 14x1.5	17	4,0	26	56
1.051-05-06	10	10L	M 16x1.5	19	5,5	27	57
1.051-06-06	10	12L	M 18x1.5	22	7,0	24	54
1.051-08-06	10	15L	M 22x1.5	27	7,0	25	55
1.051-06-08	12	12L	M 18x1.5	22	7,0	30	61
1.051-08-08	12	15L	M 22x1.5	27	10,0	26	57
1.051-10-08	12	18L	M 26x1.5	32	10,0	28	59
1.051-08-10	16	15L	M 22x1.5	27	10,0	29	63
1.051-10-10	16	18L	M 26x1.5	32	13,0	28	62
1.051-12-10	16	22L	M 30x2.0	36	13,0	31	65
1.051-10-12	19	18L	M 26x1.5	32	13,0	32	71
1.051-12-12	19	22L	M 30x2.0	36	15,0	30	69
1.051-16-12	19	28L	M 36x2.0	41	15,0	33	72
1.051-12-16	25	22L	M 30x2.0	36	15,0	37	84
1.051-16-16	25	28L	M 36x2.0	41	21,0	32	79
1.051-20-16	25	35L	M 45x2.0	50	21,0	37	83
1.051-16-20	31	28L	M 36x2.0	41	21,0	39	94
1.051-20-20	31	35L	M 45x2.0	50	27,0	35	90
1.051-24-20	31	42L	M 52x2.0	60	27,0	40	94
1.051-20-24	38	35L	M 45x2.0	50	27,0	41	98
1.051-24-24	38	42L	M 52x2.0	60	32,0	38	95
1.051-24-32	51	42L	M 52x2.0	60	36,0	36	111

Dietzel Hydraulik GmbH
Leedenstraße 10
04626 Löbichau

Tel.: +49 (36602) 140-140

E-Mail: vertrieb@dietzel-hydraulik.de

Pressure fittings

DKOL 45°

Updated at:
24.05.2022

Connection
Sealing head 24° outside cone O-ring sealing with metric nut L series

Standard
ISO 8434-1

Application
TE / SN / SC / SN-K / PTFE flexible tubes

Material
Steel

Surface protection
Zinc-electroplated

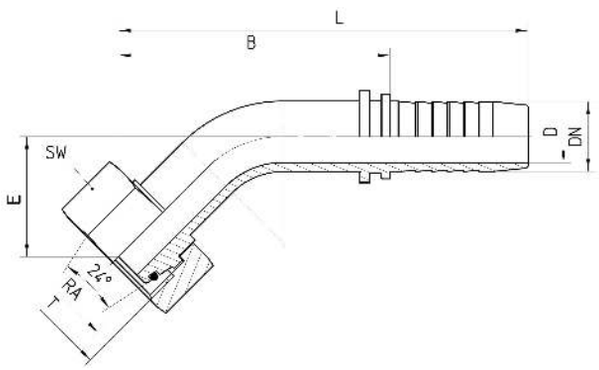

Order no.	DN in mm	RA	T	SW in mm	min. D in mm	E±3 in mm	B±3 in mm	L±3 in mm	Note
1.055-03-04	06	6L	M 12x1.5	14	2,8	15	40	63	
1.055-04-04M	06	8L	M 14x1.5	17	4,0	18	37	64	
1.055-05-04	06	10L	M 16x1.5	19	4,0	19	38	65	
1.055-04-05	08	8L	M 14x1.5	17	4,0	18	44	68	
1.055-05-05M	08	10L	M 16x1.5	19	5,5	18	41	68	
1.055-06-05	08	12L	M 18x1.5	22	5,5	20	45	69	
1.055-05-06	10	10L	M 16x1.5	19	5,5	19	40	70	
1.055-06-06M	10	12L	M 18x1.5	22	7,0	18	40	70	

Dietzel Hydraulik GmbH
Leedenstraße 10
04626 Löbichau

Tel.: +49 (36602) 140-140

E-Mail: vertrieb@dietzel-hydraulik.de

Order no.	DN in mm	RA	T	SW in mm	min. D in mm	E±3 in mm	B±3 in mm	L±3 in mm	Note
1.055-08-06	10	15L	M 22x1.5	27	7,0	19	36	66	
1.055-06-08	12	12L	M 18x1.5	22	8,0	23	52	83	
1.055-08-08M	12	15L	M 22x1.5	27	10,0	23	52	83	
1.055-10-08	12	18L	M 26x1.5	32	10,0	23	50	81	
1.055-08-10	16	15L	M 22x1.5	27	10,0	28	65	99	
1.055-10-10M	16	18L	M 26x1.5	32	13,0	25	64	98	
1.055-12-10	16	22L	M 30x2.0	36	12,6	28	64	98	
1.055-10-12	19	18L	M 26x1.5	32	11,0	34	77	116	
1.055-12-12	19	22L	M 30x2.0	36	14,8	34	77	116	
1.055-16-12	19	28L	M 36x2.0	41	14,8	32	75	114	
1.055-12-16	25	22L	M 30x2.0	36	14,0	38	83	129	
1.055-16-16	25	28L	M 36x2.0	41	21,0	37	82	128	
1.055-20-16	25	35L	M 45x2.0	50	21,0	39	83	129	
1.055-16-20	31	28L	M 36x2.0	41	21,1	40	115	169	
1.055-20-20	31	35L	M 45x2.0	50	26,5	45	107	162	
1.055-24-20	31	42L	M 52x2.0	60	26,5	39	115	163	
1.055-20-24	38	35L	M 45x2.0	50	27,0	51	112	170	
1.055-24-24	38	42L	M 52x2.0	60	32,8	58	120	181	
1.055-24-32	50	42L	M 52x2.0	60	33,0	55	135,3	210	*

Note
* wire nut

Dietzel Hydraulik GmbH
Leedenstraße 10
04626 Löbichau

Tel.: +49 (36602) 140-140

E-Mail: vertrieb@dietzel-hydraulik.de

Pressure fittings

DKOL 90°

Updated at:
24.05.2022

Connection
Sealing head 24° outside cone O-ring sealing with metric nut L series

Standard
ISO 8434-1

Application
TE / SN / SC / SN-K / PTFE flexible tubes

Material
Steel

Surface protection
Zinc-electroplated

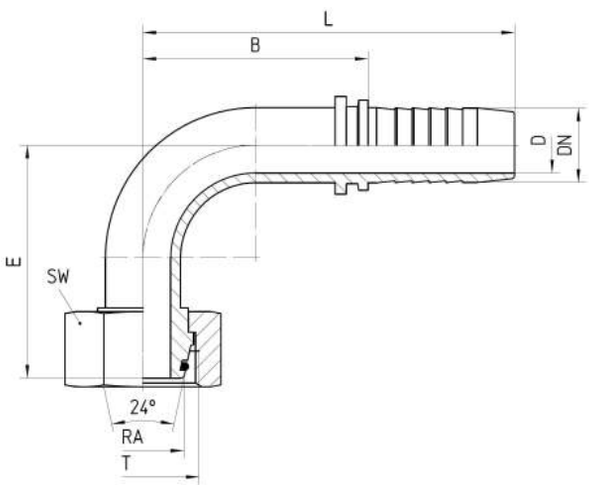

Order no.	DN in mm	RA	T	SW in mm	min. D in mm	E±3 in mm	B±3 in mm	L±3 in mm	Note
1.059-03-04	6	6L	M 12x1.5	14	2,8	28	26	53	
1.059-04-04M	6	8L	M 14x1.5	17	4,0	31	23	50	
1.059-05-04	6	10L	M 16x1.5	19	4,0	33	26	53	
1.059-04-05	8	8L	M 14x1.5	17	4,0	33	30	57	
1.059-05-05M	8	10L	M 16x1.5	19	5,5	36	30	57	
1.059-06-05	8	12L	M 18x1.5	22	5,5	35	30	57	
1.059-05-06	10	10L	M 16x1.5	19	5,5	35	30	60	

Dietzel Hydraulik GmbH
Leedenstraße 10
04626 Löbichau

Tel.: +49 (36602) 140-140

E-Mail: vertrieb@dietzel-hydraulik.de

Order no.	DN in mm	RA	T	SW in mm	min. D in mm	E±3 in mm	B±3 in mm	L±3 in mm	Note
1.059-06-06M	10	12L	M 18x1.5	22	7,0	34	30	60	
1.059-08-06	10	15L	M 22x1.5	27	7,0	35	32	62	
1.059-06-08	12	12L	M 18x1.5	22	8,0	44	42	73	
1.059-08-08M	12	15L	M 22x1.5	27	10,0	43	42	73	
1.059-10-08	12	18L	M 26x1.5	32	10,0	42	42	73	
1.059-08-10	16	15L	M 22x1.5	27	10,0	55	50	84	
1.059-10-10M	16	18L	M 26x1.5	32	13,0	48	47	81	
1.059-12-10	16	22L	M 30x2.0	36	12,6	54	52	86	
1.059-10-12	19	18L	M 26x1.5	32	11,0	64	60	99	
1.059-12-12	19	22L	M 30x2.0	36	14,8	62	61	100	
1.059-16-12	19	28L	M 36x2.0	41	14,8	63	60	99	
1.059-12-16	25	22L	M 30x2.0	36	14,0	72	68	114	
1.059-16-16	25	28L	M 36x2.0	41	21,0	74	66	112	
1.059-20-16	25	35L	M 45x2.0	50	21,0	74	68	114	
1.059-16-20	31	28L	M 36x2.0	41	21,1	87	94	148	
1.059-20-20	31	35L	M 45x2.0	50	26,5	90	87	141	
1.059-24-20	31	42L	M 52x2.0	60	26,5	89	87	141	
1.059-20-24	38	35L	M 45x2.0	50	27,0	106	105	162	
1.059-24-24	38	42L	M 52x2.0	60	32,8	103	105	162	
1.059-24-32	51	42L	M52x2.0	60	32,0	130	130	205	*

Note
* wire nut

Dietzel Hydraulik GmbH
Leedenstraße 10
04626 Löbichau

Tel.: +49 (36602) 140-140

E-Mail: vertrieb@dietzel-hydraulik.de

Pressure fittings

BES straight

Updated at:
24.05.2022

Connection
Pipe connection for cutting ring coupling S series

Standard
ISO 8434-1

Application
TE / SN / SC / SN-K / PTFE flexible tubes

Material
Steel

Surface protection
Zinc-electroplated

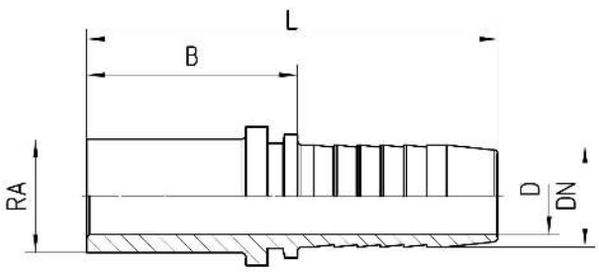

Order no.	DN in mm	RA	min. D in mm	B±3 in mm	L±3 in mm
1.123-02-04	06	6S	3,5	34	61
1.123-03-04	06	8S	4,0	34	61
1.123-04-04	06	10S	4,0	36	63
1.123-03-05	08	8S	4,0	30	57
1.123-04-05	08	10S	5,5	30	57
1.123-05-05	08	12S	5,5	32	59
1.123-05-06	10	12S	7,0	32	62
1.123-06-06	10	14S	7,0	37	67

Dietzel Hydraulik GmbH
Leedenstraße 10
04626 Löbichau

Tel.: +49 (36602) 140-140

E-Mail: vertrieb@dietzel-hydraulik.de

Order no.	DN in mm	RA	min. D in mm	B±3 in mm	L±3 in mm
1.123-08-06	10	16S	7,0	37	67
1.123-06-08	12	14S	10,0	36	67
1.123-08-08	12	16S	10,0	38	69
1.123-10-08	12	20S	10,0	53	84
1.123-10-10	16	20S	13,0	38	72
1.123-12-12	19	25S	15,0	41	80
1.123-16-16	25	30S	21,0	47	93
1.123-20-20	31	38S	27,0	39	93

Dietzel Hydraulik GmbH
Leedenstraße 10
04626 Löbichau

Tel.: +49 (36602) 140-140

E-Mail: vertrieb@dietzel-hydraulik.de

Pressure fittings

BES 45°

Updated at:
24.05.2022

Connection
Pipe connection for cutting ring coupling S series

Standard
ISO 8434-1

Application
TE / SN / SC / SN-K / PTFE flexible tubes

Material
Steel

Surface protection
Zinc-electroplated

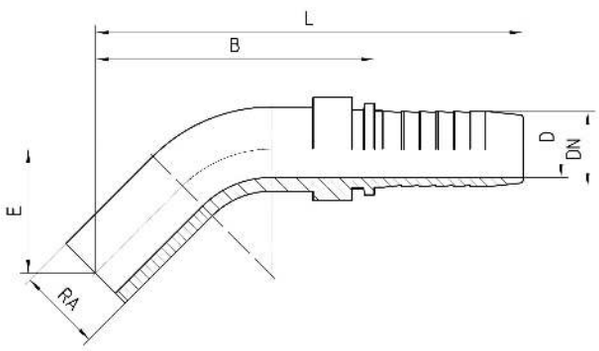

Order no.	DN in mm	RA	min. D in mm	E±3 in mm	B±3 in mm	L±3 in mm
1.125-02-04	06	6S	3,0	20,0	51	78
1.125-03-04	06	8S	4,0	20,0	53	80
1.125-04-04	06	10S	4,0	22,0	54	81
1.125-03-05	08	8S	5,0	20,0	53	80
1.125-04-05	08	10S	5,5	22,0	53	80
1.125-05-05	08	12S	5,5	22,0	57	84
1.125-05-06	10	12S	7,0	22,0	57	87
1.125-06-06	10	14S	7,0	22,5	61	91

Dietzel Hydraulik GmbH
Leedenstraße 10
04626 Löbichau

Tel.: +49 (36602) 140-140

E-Mail: vertrieb@dietzel-hydraulik.de

Order no.	DN in mm	RA	min. D in mm	E±3 in mm	B±3 in mm	L±3 in mm
1.125-08-06	10	16S	7,0	31,0	74	104
1.125-06-08	12	14S	8,0	22,5	63	94
1.125-08-08	12	16S	10,0	31,0	77	108
1.125-10-08	12	20S	10,0	32,0	80	111
1.125-10-10	16	20S	13,0	32,0	81	115
1.125-12-12	19	25S	15,0	40,0	91	130
1.125-16-16	25	30S	20,0	43,0	101	147
1.125-20-20	31	38S	27,0	46,0	110	164

Dietzel Hydraulik GmbH
Leedenstraße 10
04626 Löbichau

Tel.: +49 (36602) 140-140

E-Mail: vertrieb@dietzel-hydraulik.de

Pressure fittings

BES 90°

Updated at:
24.05.2022

Connection
Pipe connection for cutting ring coupling S series

Standard
ISO 8434-1

Application
TE / SN / SC / SN-K / PTFE flexible tubes

Material
Steel

Surface protection
Zinc-electroplated

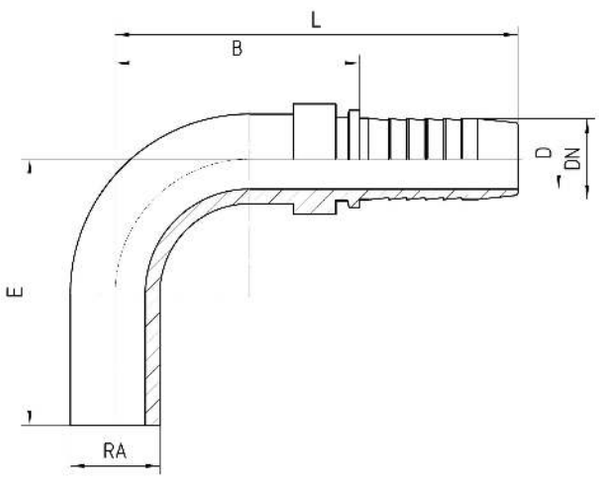

Order no.	DN in mm	RA	min. D in mm	E±3 in mm	B±3 in mm	L±3 in mm
1.129-02-04	06	6S	3,0	35	36	63
1.129-03-04	06	8S	4,0	38	38	65
1.129-04-04	06	10S	4,0	40	40	67
1.129-03-05	08	8S	5,0	35	42	69
1.129-04-05	08	10S	5,5	40	41	68
1.129-05-05	08	12S	5,5	42	47	74
1.129-05-06	10	12S	7,0	42	45	75

Dietzel Hydraulik GmbH
Leedenstraße 10
04626 Löbichau

Tel.: +49 (36602) 140-140

E-Mail: vertrieb@dietzel-hydraulik.de

Order no.	DN in mm	RA	min. D in mm	E±3 in mm	B±3 in mm	L±3 in mm
1.129-06-06	10	14S	7,0	45	51	81
1.129-08-06	10	16S	7,0	60	59	89
1.129-06-08	12	14S	8,0	45	54	85
1.129-08-08	12	16S	10,0	60	62	93
1.129-10-08	12	20S	10,0	65	67	98
1.129-10-10	16	20S	13,0	65	68	102
1.129-12-12	19	25S	11,0	80	74	113
1.129-16-16	25	30S	21,0	90	87	133
1.129-20-20	31	38S	27,0	100	100	154

Dietzel Hydraulik GmbH
Leedenstraße 10
04626 Löbichau

Tel.: +49 (36602) 140-140

E-Mail: vertrieb@dietzel-hydraulik.de

Pressure fittings

CES straight

Updated at:
11.01.2023

Connection
Metric male thread 24° with inner cone, dan pipe connection S series

Standard
ISO 8434-1

Application
TE / SN / SC / SN-K / PTFE flexible tubes

Material
Steel

Surface protection
Zinc-electroplated

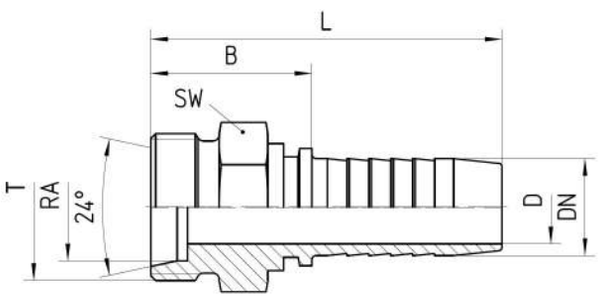

Order no.	DN in mm	RA	T	SW in mm	min. D in mm	B±3 in mm	L±3 in mm
1.180-03-04	06	8S	M 16x1.5	17	4,0	28	55
1.180-04-04	06	10S	M 18x1.5	19	4,0	28	55
1.180-05-04	06	12S	M 20x1.5	22	4,0	29	56
1.180-04-05	08	10S	M 18x1.5	19	5,5	29	56
1.180-05-05	08	12S	M 20x1.5	22	5,5	28	55
1.180-06-05	08	14S	M 22x1.5	22	5,5	34	61
1.180-05-06	10	12S	M 20x1.5	22	7,0	27	57
1.180-06-06	10	14S	M 22x1.5	22	7,0	33	63

Dietzel Hydraulik GmbH
Leedenstraße 10
04626 Löbichau

Tel.: +49 (36602) 140-140

E-Mail: vertrieb@dietzel-hydraulik.de

Order no.	DN in mm	RA	T	SW in mm	min. D in mm	B±3 in mm	L±3 in mm
1.180-08-06	10	16S	M 24x1.5	24	7,0	32	62
1.180-06-08	12	14S	M 22x1.5	22	10,0	36	67
1.180-08-08	12	16S	M 24x1.5	27	10,0	33	64
1.180-10-08	12	20S	M 30x2.0	30	10,0	35	66
1.180-08-10	16	16S	M 24x1.5	24	13,0	36	70
1.180-10-10	16	20S	M 30x2.0	30	13,0	38	72
1.180-12-10	16	25S	M 36x2.0	36	13,0	37	71
1.180-10-12	19	20S	M 30x2.0	30	15,0	36	75
1.180-12-12	19	25S	M 36x2.0	36	15,0	41	80
1.180-16-12	19	30S	M 42x2.0	46	15,0	46	85
1.180-12-16	25	25S	M 36x2.0	36	20,0	49	95
1.180-16-16	25	30S	M 42x2.0	46	21,1	44	90
1.180-20-16	25	38S	M 52x2.0	55	21,1	52	98
1.180-16-20	31	30S	M 42x2.0	46	21,0	55	109
1.180-20-20	31	38S	M 52x2.0	55	27,0	45	99
1.180-20-24	38	38S	M 52x2.0	55	32,5	49	106

Dietzel Hydraulik GmbH
Leedenstraße 10
04626 Löbichau

Tel.: +49 (36602) 140-140

E-Mail: vertrieb@dietzel-hydraulik.de

Pressure fittings

CES 45°

Updated at:
24.05.2022

Connection
Metric male thread 24° with inner cone, dan pipe connection S series

Standard
ISO 8434-1

Application
TE / SN / SC / SN-K / PTFE flexible tubes

Material
Steel

Surface protection
Zinc-electroplated

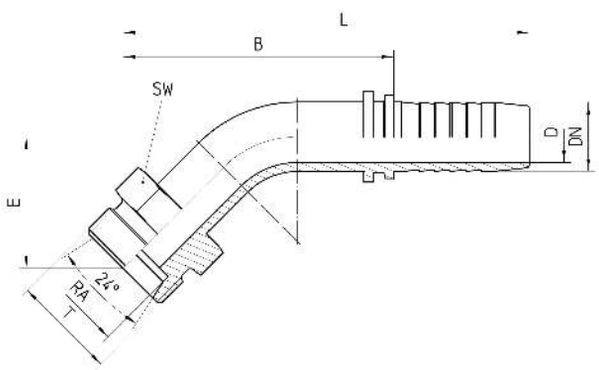

Order no.	DN in mm	RA	T	SW in mm	min. D in mm	E±3 in mm	B±3 in mm	L±3 in mm
1.185-03-04	06	8S	M 16x1.5	17	4,0	21	42	69
1.185-04-04	06	10S	M 18x1.5	19	4,0	20	41	68
1.185-05-04	06	12S	M 20x1.5	22	4,0	21	42	69
1.185-04-05	08	10S	M 18x1.5	19	5,5	20	45	72
1.185-05-05	08	12S	M 20x1.5	22	5,5	22	44	71
1.185-06-05	08	14S	M 22x1.5	22	5,5	23	46	73
1.185-05-06	10	12S	M 20x1.5	22	7,0	21	43	73
1.185-06-06	10	14S	M 22x1.5	22	7,0	22	44	74

Dietzel Hydraulik GmbH
Leedenstraße 10
04626 Löbichau

Tel.: +49 (36602) 140-140

E-Mail: vertrieb@dietzel-hydraulik.de

Order no.	DN in mm	RA	T	SW in mm	min. D in mm	E±3 in mm	B±3 in mm	L±3 in mm
1.185-08-06	10	16S	M 24x1.5	24	7,0	24	48	78
1.185-06-08	12	14S	M 22x1.5	22	10,0	28	56	87
1.185-08-08	12	16S	M 24x1.5	24	10,0	27	55	86
1.185-10-08	12	20S	M 30x2.0	30	10,0	29	55	86
1.185-08-10	16	16S	M 24x1.5	24	12,6	32	68	102
1.185-10-10	16	20S	M 30x2.0	30	12,6	33	70	104
1.185-12-10	16	25S	M 36x2.0	36	12,6	35	71	105
1.185-10-12	19	20S	M 30x2.0	30	14,8	41	82	121
1.185-12-12	19	25S	M 36x2.0	41	14,8	41	82	121
1.185-16-12	19	30S	M 42x2.0	46	14,8	40	82	121
1.185-12-16	25	25S	M 36x2.0	36	16,6	42	90	136
1.185-16-16	25	30S	M 42x2.0	46	21,1	45	92	138
1.185-20-16	25	38S	M 52x2.0	55	21,1	47	93	139
1.185-16-20	31	30S	M 42x2.0	46	20,0	52	120	174
1.185-20-20	31	38S	M 52x2.0	55	26,5	59	126	180
1.185-20-24	38	38S	M 52x2.0	55	26,1	56	126	183

Dietzel Hydraulik GmbH
Leedenstraße 10
04626 Löbichau

Tel.: +49 (36602) 140-140

E-Mail: vertrieb@dietzel-hydraulik.de

Pressure fittings

CES 90°

Updated at:
24.05.2022

Connection
Metric male thread 24° with inner cone, dan pipe connection S series

Standard
ISO 8434-1

Application
TE / SN / SC / SN-K / PTFE flexible tubes

Material
Steel

Surface protection
Zinc-electroplated

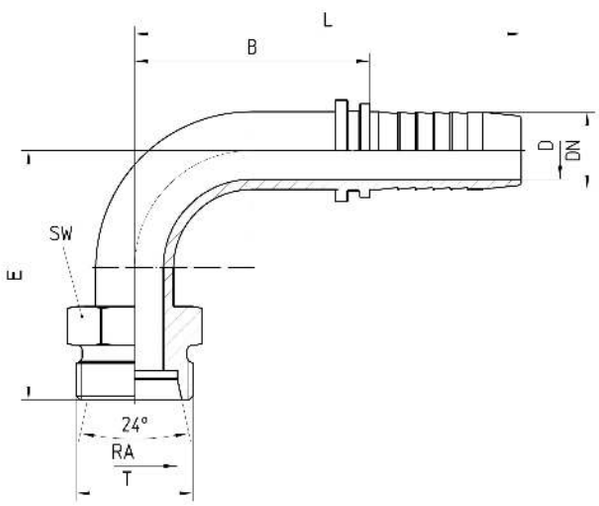

Order no.	DN in mm	RA	T	SW in mm	min. D in mm	E±3 in mm	B±3 in mm	L±3 in mm
1.189-03-04	06	8S	M 16x1.5	17	4,0	37	26	53
1.189-04-04	06	10S	M 18x1.5	19	4,0	36	26	53
1.189-05-04	06	12S	M 20x1.5	22	4,0	36	26	53
1.189-04-05	08	10S	M 18x1.5	19	5,5	36	30	57
1.189-05-05	08	12S	M 20x1.5	22	5,5	38	32	59
1.189-06-05	08	14S	M 22x1.5	22	5,5	38	32	59

Dietzel Hydraulik GmbH
Leedenstraße 10
04626 Löbichau

Tel.: +49 (36602) 140-140

E-Mail: vertrieb@dietzel-hydraulik.de

Order no.	DN in mm	RA	T	SW in mm	min. D in mm	E±3 in mm	B±3 in mm	L±3 in mm
1.189-05-06	10	12S	M 20x1.5	22	7,0	37	31	61
1.189-06-06	10	14S	M 22x1.5	22	7,0	40	31	61
1.189-08-06	10	16S	M 24x1.5	24	7,0	41	30	60
1.189-06-08	12	14S	M 22x1.5	22	10,0	50	42	73
1.189-08-08	12	16S	M 24x1.5	24	10,0	47	42	73
1.189-10-08	12	20S	M 30x2.0	30	10,0	50	42	73
1.189-08-10	16	16S	M 24x1.5	24	12,6	58	52	86
1.189-10-10	16	20S	M 30x2.0	30	12,6	60	52	86
1.189-12-10	16	25S	M 36x2.0	36	12,6	62	52	86
1.189-10-12	19	20S	M 30x2.0	30	14,8	72	61	100
1.189-12-12	19	25S	M 36x2.0	41	14,8	73	60	99
1.189-16-12	19	30S	M 42x2.0	46	14,8	73	60	99
1.189-12-16	25	25S	M 36x2.0	36	21,1	83	68	114
1.189-16-16	25	30S	M 42x2.0	46	21,1	82	68	114
1.189-20-16	25	38S	M 52x2.0	55	21,1	95	68	114
1.189-16-20	31	30S	M 42x2.0	46	26,1	97	94	148
1.189-20-20	31	38S	M 52x2.0	55	26,5	95	94	148
1.189-20-24	38	38S	M 52x2.0	55	32,5	112	105	162

Dietzel Hydraulik GmbH
Leedenstraße 10
04626 Löbichau

Tel.: +49 (36602) 140-140

E-Mail: vertrieb@dietzel-hydraulik.de

Pressure fittings

DKOS straight

Updated at:
24.05.2022

Connection
Sealing head 24° outside cone O-ring sealing with metric nut S series

Standard
ISO 8434-1

Application
TE / SN / SC / SN-K / PTFE flexible tubes

Material
Steel

Surface protection
Zinc-electroplated

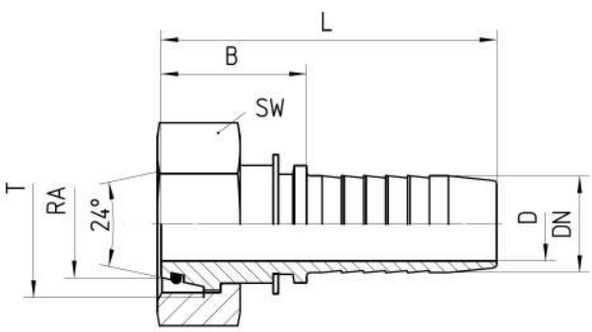

Order no.	DN in mm	RA	T	SW in mm	min. D in mm	B±3 in mm	L±3 in mm	Note
1.081-02-04	06	6S	M 14x1.5	17	2,8	25	52	
1.081-03-04	06	8S	M 16x1.5	19	4,0	25	53	
1.081-04-04	06	10S	M 18x1.5	22	4,0	25	53	
1.081-05-04	06	12S	M 20x1.5	24	4,0	27	55	
1.081-04-05	08	10S	M 18x1.5	22	5,5	25	52	
1.081-05-05	08	12S	M 20x1.5	24	5,5	25	52	
1.081-06-05	08	14S	M 22x1.5	27	5,5	29	57	
1.081-05-06	10	12S	M 20x1.5	24	7,0	26	56	

Dietzel Hydraulik GmbH
Leedenstraße 10
04626 Löbichau

Tel.: +49 (36602) 140-140

E-Mail: vertrieb@dietzel-hydraulik.de

Order no.	DN in mm	RA	T	SW in mm	min. D in mm	B±3 in mm	L±3 in mm	Note
1.081-06-06	10	14S	M 22x1.5	27	7,0	27	56	
1.081-08-06	10	16S	M 24x1.5	30	7,0	28	58	
1.081-06-08	12	14S	M 22x1.5	27	7,0	32	63	
1.081-08-08	12	16S	M 24x1.5	30	10,0	30	61	
1.081-10-08	12	20S	M 30x2.0	36	10,0	33	64	
1.081-08-10	16	16S	M 24x1.5	30	10,0	32	66	
1.081-10-10	16	20S	M 30x2.0	36	13,0	35	69	
1.081-12-10/ SW41	16	25S	M 36x2.0	41	13,0	34	68	a
1.081-12-10/ SW46	16	25S	M 36x2.0	46	13,0	34	68	
1.081-10-12	19	20S	M 30x2.0	36	13,0	35	74	
1.081-12-12/ SW41	19	25S	M 36x2.0	41	15,0	39	78	a
1.081-12-12/ SW46	19	25S	M 36x2.0	46	15,0	39	78	
1.081-16-12	19	30S	M 42x2.0	50	15,0	38	77	
1.081-12-16/ SW46	25	25S	M 36x2.0	46	15,0	41	87	
1.081-16-16	25	30S	M 42x2.0	50	21,0	44	90	
1.081-20-16	25	38S	M 52x2.0	60	21,0	37	84	
1.081-16-20	31	30S	M 42x2.0	50	21,0	41	95	
1.081-20-20	31	38S	M 52x2.0	60	27,0	51	106	
1.081-20-24	38	38S	M 52x2.0	60	27.0	41	99	
1.081-24-24	38	50S	M 68x2.0	80	33,0	53	111	
1.081-24-32	51	50S	M 68x2.0	80	40,0	44	119	

Note
a) not according to ISO 8434-1

Dietzel Hydraulik GmbH
Leedenstraße 10
04626 Löbichau

Tel.: +49 (36602) 140-140

E-Mail: vertrieb@dietzel-hydraulik.de

Pressure fittings

DKOS 45°

Updated at:
11.01.2023

Connection
Sealing head 24° outside cone O-ring sealing with metric nut S series

Standard
ISO 8434-1

Application
TE / SN / SC / SN-K / PTFE flexible tubes

Material
Steel

Surface protection
Zinc-electroplated

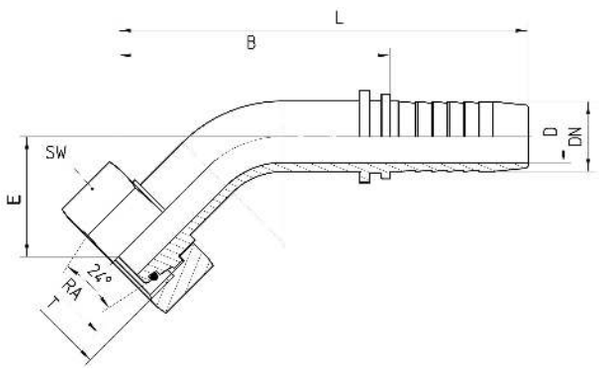

Order no.	DN in mm	RA	T	SW in mm	min. D in mm	E±3 in mm	B±3 in mm	L±3 in mm	Note
1.085-03-04	06	8S	M 16x1.5	19	4,0	18	38	65	
1.085-04-04	06	10S	M 18x1.5	22	4,0	18	39	66	
1.085-05-04	06	12S	M 20x1.5	24	4,0	19	39	66	
1.085-04-05	08	10S	M 18x1.5	22	5,5	19	42	69	
1.085-05-05	08	12S	M 20x1.5	24	5,5	19	42	69	
1.085-06-05	08	14S	M 22x1.5	27	5,5	20	43	70	
1.085-05-06	10	12S	M 20x1.5	24	7,0	18	41	71	
1.085-06-06	10	14S	M 22x1.5	27	7,0	20	41	71	

Dietzel Hydraulik GmbH
Leedenstraße 10
04626 Löbichau

Tel.: +49 (36602) 140-140

E-Mail: vertrieb@dietzel-hydraulik.de

Order no.	DN in mm	RA	T	SW in mm	min. D in mm	E±3 in mm	B±3 in mm	L±3 in mm	Note
1.085-08-06	10	16S	M 24x1.5	30	7,0	20	41	71	
1.085-06-08	12	14S	M 22x1.5	27	7,0	24	54	85	
1.085-08-08	12	16S	M 24x1.5	30	10,0	24	54	85	
1.085-10-08	12	20S	M 30x2.0	36	10,0	29	68	99	
1.085-08-10	16	16S	M 24x1.5	30	10,0	29	65	99	
1.085-10-10	16	20S	M 30x2.0	36	12,6	30	66	100	
1.085-12-10/ SW41	16	25S	M 36x2.0	41	12,6	31	67	101	a
1.085-12-10/ SW46	16	25S	M 36x2.0	46	12,6	31	67	101	
1.085-10-12	19	20S	M 30x2.0	36	13,0	34	78	117	
1.085-12-12/ SW41	19	25S	M 36x2.0	41	14,8	36	79	118	a
1.085-12-12/ SW46	19	25S	M 36x2.0	46	14,8	36	79	118	
1.085-16-12	19	30S	M 42x2.0	50	14,8	34	74	113	
1.085-12-16/ SW46	25	25S	M 36x2.0	46	14,8	40	89	135	
1.085-16-16	25	30S	M 42x2.0	50	21,0	40	88	134	
1.085-20-16	25	38S	M 52x2.0	60	21,1	41	83	129	
1.085-16-20	31	30S	M 42x2.0	50	21,0	42	112	166	
1.085-20-20	31	38S	M 52x2.0	60	26,5	40	109	163	
1.085-20-24	38	38S	M 52x2.0	60	27,0	54	118	175	
1.085-24-24	38	50S	M 68x2.0	80	32,8	49	117	174	

Note
a) not according to ISO 8434-1

Dietzel Hydraulik GmbH
Leedenstraße 10
04626 Löbichau

Tel.: +49 (36602) 140-140

E-Mail: vertrieb@dietzel-hydraulik.de

Pressure fittings

DKOS 90°

Updated at:
24.05.2022

Connection
Sealing head 24° outside cone O-ring sealing with metric nut S series

Standard
ISO 8434-1

Application
TE / SN / SC / SN-K / PTFE flexible tubes

Material
Steel

Surface protection
Zinc-electroplated

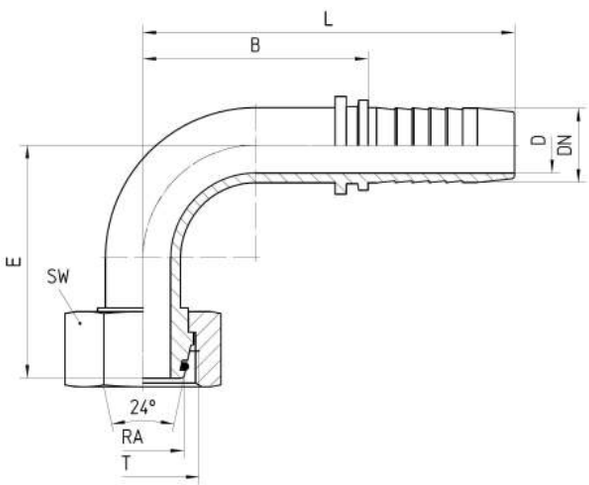

Order no.	DN in mm	RA	T	SW in mm	min. D in mm	E±3 in mm	B±3 in mm	L±3 in mm	Note
1.089-03-04	06	8S	M 16x1.5	19	4,0	32	26	53	
1.089-04-04	06	10S	M 18x1.5	22	4,0	33	25	52	
1.089-05-04	06	12S	M 20x1.5	24	4,0	33	26	53	
1.089-04-05	08	10S	M 18x1.5	22	5,5	35	30	57	
1.089-05-05	08	12S	M 20x1.5	24	5,5	35	30	57	
1.089-06-05	08	14S	M 22x1.5	27	5,5	36	31	58	
1.089-05-06	10	12S	M 20x1.5	24	7,0	34	30	60	

Dietzel Hydraulik GmbH
Leedenstraße 10
04626 Löbichau

Tel.: +49 (36602) 140-140

E-Mail: vertrieb@dietzel-hydraulik.de

Order no.	DN in mm	RA	T	SW in mm	min. D in mm	E±3 in mm	B±3 in mm	L±3 in mm	Note
1.089-06-06	10	14S	M 22x1.5	27	7,0	35	30	60	
1.089-08-06	10	16S	M 24x1.5	30	7,0	36	30	60	
1.089-06-08	12	14S	M 22x1.5	27	7,0	45	42	73	
1.089-08-08	12	16S	M 24x1.5	30	10,0	46	43	74	
1.089-10-08	12	20S	M 30x2.0	36	10,0	48	42	73	
1.089-08-10	16	16S	M 24x1.5	30	10,0	56	52	86	
1.089-10-10	16	20S	M 30x2.0	36	12,6	56	52	86	
1.089-12-10/ SW41	16	25S	M 36x2.0	41	12,6	55	53	87	a
1.089-12-10/ SW46	16	25S	M 36x2.0	46	12,6	55	53	87	
1.089-10-12	19	20S	M 30x2.0	36	13,0	68	60	99	
1.089-12-12/ SW41	19	25S	M 36x2.0	41	14,8	68	61	100	a
1.089-12-12/ SW46	19	25S	M 36x2.0	46	14,8	68	61	100	
1.089-16-12	19	30S	M 42x2.0	50	14,8	65	59	98	
1.089-12-16/ SW46	25	25S	M 36x2.0	46	14,8	64	68	114	
1.089-16-16	25	30S	M 42x2.0	50	21,0	79	68	114	
1.089-20-16	25	38S	M 52x2.0	60	21,1	74	68	114	
1.089-16-20	31	30S	M 42x2.0	50	21,0	87	94	148	
1.089-20-20	31	38S	M 52x2.0	60	26,5	87	81	145	
1.089-20-24	38	38S	M 52x2.0	60	27,0	106	105	162	
1.089-24-24	38	50S	M 68x2.0	80	32,8	115	105	162	

Note
a) not according to ISO 8434-1

Dietzel Hydraulik GmbH
Leedenstraße 10
04626 Löbichau

Tel.: +49 (36602) 140-140

E-Mail: vertrieb@dietzel-hydraulik.de

Pressure fittings

AGR Cone straight

Updated at:
24.05.2022

Connection
GNP male thread (R) coned sealing

Application
TE / SN / SC / SN-K / PTFE flexible tubes

Material
Steel

Surface protection
Zinc-electroplated

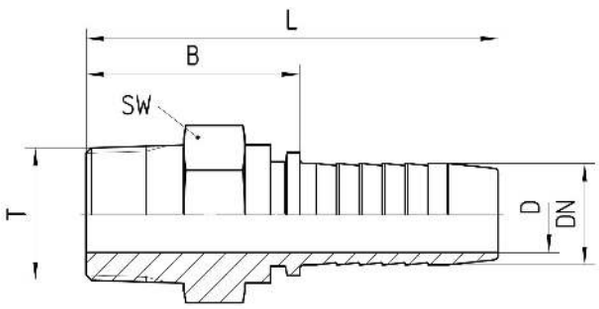

Order no.	DN in mm	T in inch	SW in mm	min. D in mm	B±3 in mm	L±3 in mm
1.301-04-04	06	R 1/4	17	4,0	37	64
1.301-06-05	08	R 3/8	22	5,5	37	65
1.301-04-06	10	R 1/4	17	7,0	36	66
1.301-06-06	10	R 3/8	22	7,0	37	67
1.301-08-08	12	R 1/2	22	10,0	42	74
1.301-12-12	19	R 3/4	30	15,0	47	86
1.301-16-16	25	R 1	41	21,0	43	89
1.301-20-20	31	R 1 1/4	46	26,0	59	114
1.301-24-24	38	R 1 1/2	50	32,8	68	126
1.301-32-32	51	R 2	65	44,5	87	162

Dietzel Hydraulik GmbH
Leedenstraße 10
04626 Löbichau

Tel.: +49 (36602) 140-140

E-Mail: vertrieb@dietzel-hydraulik.de

Order no.	DN in mm	T in inch	SW in mm	min. D in mm	B±3 in mm	L±3 in mm
1.301-40-36	60	R 2 1/2	80	52,0	106	186
1.301-40-40	63	R 2 1/2	80	52,0	103	183
1.301-48-48	76	R 3	90	68,0	93	168

Dietzel Hydraulik GmbH
Leedenstraße 10
04626 Löbichau

Tel.: +49 (36602) 140-140

E-Mail: vertrieb@dietzel-hydraulik.de

Pressure fittings

AGR cylindrical straight

Updated at:
24.05.2022

Connection
BSPP male thread (G) with 60° inner cone

Standard
ISO 8434-6

Application
TE / SN / SC / SN-K / PTFE flexible tubes

Material
Steel

Surface protection
Zinc-electroplated

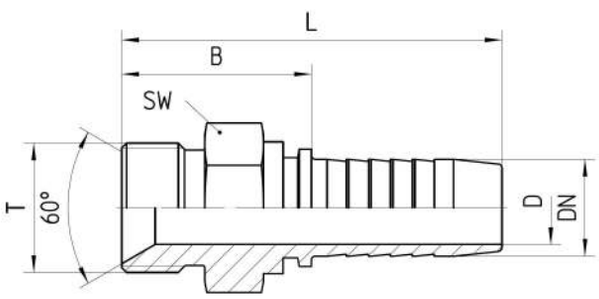

Order no.	DN in mm	T in inch	SW in mm	min. D in mm	B±3 in mm	L±3 in mm
1.260-02-04	06	G 1/8	14	4,0	21	49
1.260-04-04	06	G 1/4	19	4,0	27	55
1.260-06-04	06	G 3/8	22	4,0	28	56
1.260-04-05	08	G 1/4	19	5,5	27	55
1.260-06-05	08	G 3/8	22	5,5	28	56
1.260-04-06	10	G 1/4	19	6,9	27	57
1.260-06-06	10	G 3/8	22	7,0	29	59
1.260-08-06	10	G 1/2	27	7,0	33	63

Dietzel Hydraulik GmbH
Leedenstraße 10
04626 Löbichau

Tel.: +49 (36602) 140-140

E-Mail: vertrieb@dietzel-hydraulik.de

Order no.	DN in mm	T in inch	SW in mm	min. D in mm	B±3 in mm	L±3 in mm
1.260-06-08	12	G 3/8	22	10,0	38	69
1.260-08-08	12	G 1/2	22	10,0	41	72
1.260-10-08	12	G 5/8	30	10,0	42	73
1.260-08-10	16	G 1/2	22	10,0	42	76
1.260-10-10	16	G 5/8	30	13,0	44	78
1.260-12-10	16	G 3/4	30	13,0	42	76
1.260-10-12	19	G 5/8	30	13,5	47	86
1.260-12-12	19	G 3/4	32	15,0	37	77
1.260-16-12	19	G 1	36	15,0	48	87
1.260-12-16	25	G 3/4	30	15,0	49	95
1.260-16-16	25	G 1	36	21,0	41	87
1.260-20-16	25	G 1 1/4	46	21,0	53	99
1.260-16-20	31	G 1	36	23,0	61	115
1.260-20-20	31	G 1 1/4	46	26,5	62	116
1.260-24-20	31	G 1 1/2	50	27,0	57	111
1.260-20-24	38	G 1 1/4	46	27,0	48	106
1.260-24-24	38	G 1 1/2	50	32,8	68	125
1.260-32-24	38	G 2	65	32,8	71	128
1.260-24-32	51	G 1 1/2	50	31,0	61	136
1.260-32-32	51	G 2	65	44,5	51	126
1.260-40-32	51	G 2 1/2	80	44,0	65	140
1.260-32-36	60	G 2	65	44,5	102	182
1.260-40-36	60	G 2 1/2	80	52,0	65	145
1.260-48-36	60	G 3	90	52,0	65	145
1.260-40-40	63	G 2 1/2	80	52,0	63	143
1.260-40-48	76	G 2 1/2	80	58,0	85	160
1.260-48-48	76	G 3	90	68,0	85	160

Dietzel Hydraulik GmbH
Leedenstraße 10
04626 Löbichau

Tel.: +49 (36602) 140-140

E-Mail: vertrieb@dietzel-hydraulik.de

Pressure fittings

DKR straight

Updated at:
24.05.2022

Connection
Sealing head 60° outside cone with BSPP nut (G)

Standard
ISO 8434-6

Application
TE / SN / SC / SN-K / PTFE flexible tubes

Material
Steel

Surface protection
Zinc-electroplated

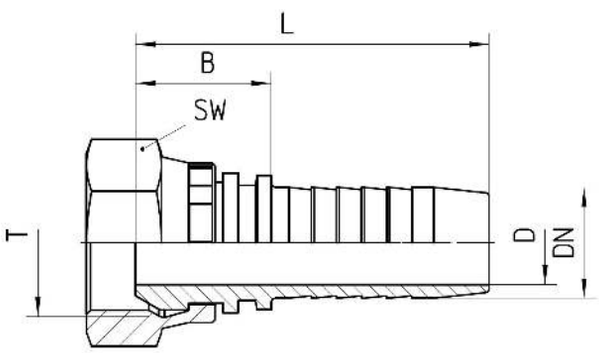

Order no.	DN in mm	T in inch	SW in mm	min. D in mm	B±3 in mm	L±3 in mm
1.203-04-04	06	G 1/4	17	4,0	17	44
1.203-06-04	06	G 3/8	22	4,0	19	47
1.203-04-05	08	G 1/4	19	5,5	17	45
1.203-06-05	08	G 3/8	22	5,5	19	47
1.203-06-06	10	G 3/8	22	7,0	19	49
1.203-08-06	10	G 1/2	27	7,0	21	51
1.203-06-08	12	G 3/8	22	7,0	36	67
1.203-08-08	12	G 1/2	27	10,0	23	54

Dietzel Hydraulik GmbH
Leedenstraße 10
04626 Löbichau

Tel.: +49 (36602) 140-140

E-Mail: vertrieb@dietzel-hydraulik.de

Order no.	DN in mm	T in inch	SW in mm	min. D in mm	B±3 in mm	L±3 in mm
1.203-10-08	12	G 5/8	30	10,0	22	53
1.203-08-10	16	G 1/2	27	10,0	40	74
1.203-10-10	16	G 5/8	30	13,0	22	56
1.203-12-10	16	G 3/4	32	13,0	24	58
1.203-10-12	19	G 5/8	30	12,0	42	81
1.203-12-12	19	G 3/4	32	15,0	24	63
1.203-16-12	19	G 1	41	15,0	48	87
1.203-12-16	25	G 3/4	32	15,0	48	95
1.203-16-16	25	G 1	41	21,0	27	74
1.203-20-16	25	G 1 1/4	50	20,0	54	101
1.203-16-20	31	G 1	41	21,0	54	109
1.203-20-20	31	G 1 1/4	50	27,0	31	86
1.203-24-20	31	G 1 1/2	55	27,0	32	86
1.203-20-24	38	G 1 1/4	50	27,0	58	116
1.203-24-24	38	G 1 1/2	55	32,0	31	89
1.203-32-24	38	G 2	70	32,5	58	116
1.203-24-32	51	G 1 1/2	55	31,0	60	134
1.203-32-32	51	G 2	70	44,5	32	106
1.203-40-36	60	G 2 1/2	85	52,0	80	160
1.203-40-40	63	G 2 1/2	85	52,0	77	157
1.203-48-48	76	G 3	100	68,0	65	140

Dietzel Hydraulik GmbH
Leedenstraße 10
04626 Löbichau

Tel.: +49 (36602) 140-140

E-Mail: vertrieb@dietzel-hydraulik.de

Pressure fittings

DKR 45°

Updated at:
24.05.2022

Connection
Sealing head 60° outside cone with BSPP nut (G)

Standard
ISO 8434-6

Application
TE / SN / SC / SN-K / PTFE flexible tubes

Material
Steel

Surface protection
Zinc-electroplated

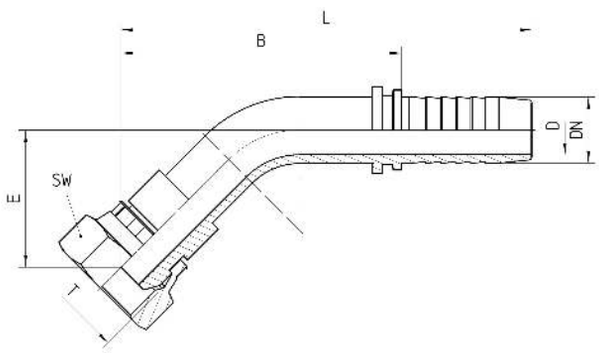

Order no.	DN in mm	T in inch	SW in mm	min. D in mm	E±3 in mm	B±3 in mm	L±3 in mm
1.233-04-04	06	1/4	19	4,0	15	41	69
1.233-06-04	06	3/8	22	4,0	18	44	72
1.233-04-05	08	1/4	17	5,5	15	38	65
1.233-06-05	08	3/8	22	5,5	19	51	79
1.233-06-06	10	3/8	22	7,0	15	38	68
1.233-08-06	10	1/2	27	7,0	16	39	69
1.233-06-08	12	3/8	22	7,0	26	56	87
1.233-08-08	12	1/2	27	10,0	29	59	90

Dietzel Hydraulik GmbH
Leedenstraße 10
04626 Löbichau

Tel.: +49 (36602) 140-140

E-Mail: vertrieb@dietzel-hydraulik.de

Order no.	DN in mm	T in inch	SW in mm	min. D in mm	E±3 in mm	B±3 in mm	L±3 in mm
1.233-10-08	12	5/8	30	10,0	30	57	88
1.233-08-10	16	1/2	27	10,0	33	71	105
1.233-10-10	16	5/8	30	12,0	36	68	102
1.233-12-10	16	3/4	32	12,6	30	73	107
1.233-10-12	19	5/8	30	12,0	38	81	120
1.233-12-12	19	3/4	32	14,8	40	84	123
1.233-16-12	19	1	41	14,8	42	85	124
1.233-12-16	25	3/4	32	14,8	42	91	137
1.233-16-16	25	1	41	21,0	45	94	140
1.233-20-16	25	1 1/4	50	20,0	43	93	139
1.233-16-20	31	1	41	21,0	40	113	167
1.233-20-20	31	1 1/4	50	26,5	48	123	177
1.233-24-20	31	1 1/2	55	26,5	50	114	168
1.233-20-24	38	1 1/4	50	26,5	62	128	185
1.233-24-24	38	1 1/2	55	32,5	64	133	191
1.233-32-24	38	2	70	32,5	65	131	188
1.233-24-32	51	1 1/2	55	32,5	57	127	202
1.233-32-32	51	2	70	44,5	65	140	215
1.233-40-36	60	2 1/2	85	52,0	53	148	228

Dietzel Hydraulik GmbH
Leedenstraße 10
04626 Löbichau

Tel.: +49 (36602) 140-140

E-Mail: vertrieb@dietzel-hydraulik.de

Pressure fittings

DKR 90°

Updated at:
24.05.2022

Connection
Sealing head 60° outside cone with BSPP nut (G)

Standard
ISO 8434-6

Application
TE / SN / SC / SN-K / PTFE flexible tubes

Material
Steel

Surface protection
Zinc-electroplated

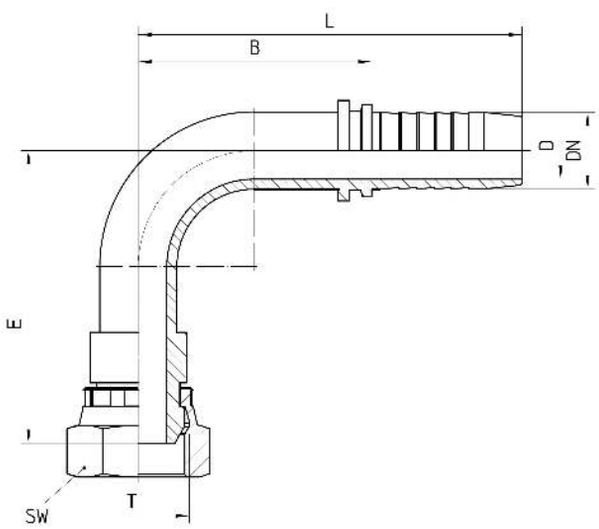

Order no.	DN in mm	T in inch	SW in mm	min. D in mm	E±3 in mm	B±3 in mm	L±3 in mm
1.243-04-04	06	G 1/4	19	4,0	27	25	53
1.243-06-04	06	G 3/8	22	4,0	31	25	53
1.243-04-05	08	G 1/4	17	5,5	30	30	57
1.243-06-05	08	G 3/8	22	5,5	36	29	57

Dietzel Hydraulik GmbH
Leedenstraße 10
04626 Löbichau

Tel.: +49 (36602) 140-140

E-Mail: vertrieb@dietzel-hydraulik.de

Order no.	DN in mm	T in inch	SW in mm	min. D in mm	E±3 in mm	B±3 in mm	L±3 in mm
1.243-06-06	10	G 3/8	22	7,0	30	32	62
1.243-08-06	10	G 1/2	27	7,0	40	31	61
1.243-06-08	12	G 3/8	22	7,0	46	42	73
1.243-08-08	12	G 1/2	27	10,0	52	42	73
1.243-10-08	12	G 5/8	30	10,0	52	42	73
1.243-08-10	16	G 1/2	27	10,0	53	52	86
1.243-10-10	16	G 5/8	30	12,0	60	52	86
1.243-12-10	16	G 3/4	32	12,6	62	52	86
1.243-10-12	19	G 5/8	30	12,0	61	60	99
1.243-12-12	19	G 3/4	32	14,8	75	60	99
1.243-16-12	19	G 1	41	14,8	76	62	101
1.243-12-16	25	G 3/4	32	14,8	72	64	111
1.243-16-16	25	G 1	41	20,0	87	69	116
1.243-20-16	25	G 1 1/4	50	20,0	83	67	114
1.243-16-20	31	G 1	41	21,0	84	93	148
1.243-20-20	31	G 1 1/4	50	26,5	92	93	148
1.243-24-20	31	G 1 1/2	55	26,5	91	93	148
1.243-20-24	38	G 1 1/4	50	26,5	97	104	162
1.243-24-24	38	G 1 1/2	55	32,5	101	104	162
1.243-32-24	38	G 2	70	32,5	102	104	162
1.243-24-32	51	G 1 1/2	55	32,5	120	130	205
1.243-32-32	51	G 2	70	44,5	121	130	205
1.243-40-36	60	G 2 1/2	85	52,0	129	173	253
1.243-40-40	63	G 2 1/2	85	52,0	130	170	250
1.243-48-48	76	3	100	68,0	145	150	225

Dietzel Hydraulik GmbH
Leedenstraße 10
04626 Löbichau

Tel.: +49 (36602) 140-140

E-Mail: vertrieb@dietzel-hydraulik.de

Pressure fittings

AGJ straight

Updated at:
24.05.2022

Connection
UN male thread with 74° outside cone

Standard
ISO 8434-2

Application
TE / SN / SC / SN-K / PTFE flexible tubes

Material
Steel

Surface protection
Zinc-electroplated

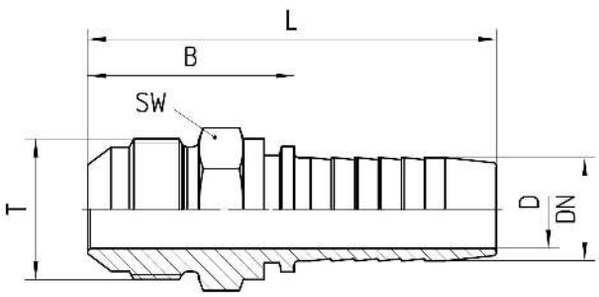

Order no.	DN in mm	T in UNF/UN	SW in mm	min. D in mm	B±3 in mm	L±3 in mm
1.370-04-04	06	7/16-20 UNF	12	4,0	27	55
1.370-05-04	06	1/2-20 UNF	14	4,0	27	55
1.370-04-05	08	7/16-20 UNF	14	4,0	38	65
1.370-05-05	08	1/2-20 UNF	14	5,5	27	55
1.370-06-05	08	9/16-18 UNF	15	5,5	27	55
1.370-05-06	10	1/2-20 UNF	14	5,5	34	64
1.370-06-06	10	9/16-18 UNF	15	7,0	27	57
1.370-08-06	10	3/4-16 UNF	19	7,0	30	60

Dietzel Hydraulik GmbH
Leedenstraße 10
04626 Löbichau

Tel.: +49 (36602) 140-140

E-Mail: vertrieb@dietzel-hydraulik.de

Order no.	DN in mm	T in UNF/UN	SW in mm	min. D in mm	B±3 in mm	L±3 in mm
1.370-06-08	12	9/16-18 UNF	17	7,0	38	69
1.370-08-08	12	3/4-16 UNF	22	10,0	42	73
1.370-10-08	12	7/8-14 UNF	27	10,0	44	75
1.370-08-10	16	3/4-16 UNF	22	10,0	43	77
1.370-10-10	16	7/8-14 UNF	27	12,0	45	79
1.370-12-10	16	1 1/16-12 UN	27	13,0	50	84
1.370-10-12	19	7/8-14 UNF	27	12,0	48	87
1.370-12-12	19	1 1/16-12 UN	27	15,0	39	79
1.370-16-12	19	1 5/16-12 UN	36	15,0	46	85
1.370-12-16	25	1 1/16-12 UN	27	15,0	56	103
1.370-16-16	25	1 5/16-12 UN	36	21,0	58	104
1.370-20-16	25	1 5/8-12 UN	46	21,0	59	106
1.370-16-20	31	1 5/16-12 UN	36	20,0	61	115
1.370-20-20	31	1 5/8-12 UN	46	27,0	63	117
1.370-24-20	31	1 7/8-12 UN	55	27,0	65	120
1.370-24-24	38	1 7/8-12	50	32,0	52	120
1.370-32-32	51	2 1/2-12	70	44,5	76	151

Dietzel Hydraulik GmbH
Leedenstraße 10
04626 Löbichau

Tel.: +49 (36602) 140-140

E-Mail: vertrieb@dietzel-hydraulik.de

Pressure fittings

DKJ straight

Updated at:
24.05.2022

Connection
Sealing head 74° inner cone with UN nut

Standard
ISO 8434-2

Application
TE / SN / SC / SN-K / PTFE flexible tubes

Material
Steel

Surface protection
Zinc-electroplated

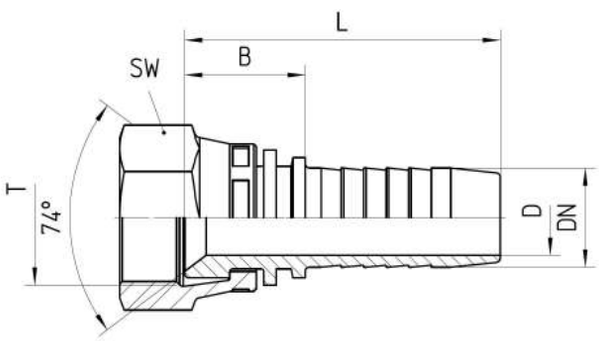

Order no.	DN in mm	T in UNF/UN	SW in mm	min. D in mm	B±3 in mm	L±3 in mm
1.313-04-04	06	7/16-20	17	4,0	14	42
1.313-05-04	06	1/2-20	17	4,0	15	43
1.313-04-05	08	7/16-20	17	4,0	16	44
1.313-05-05	08	1/2-20	17	5,5	15	43
1.313-06-05	08	9/16-18	19	5,5	16	44
1.313-05-06	10	1/2-20	17	4,0	18	48
1.313-06-06	10	9/16-18	19	7,0	16	46
1.313-08-06	10	3/4-16	24	7,0	17	47

Dietzel Hydraulik GmbH
Leedenstraße 10
04626 Löbichau

Tel.: +49 (36602) 140-140

E-Mail: vertrieb@dietzel-hydraulik.de

Order no.	DN in mm	T in UNF/UN	SW in mm	min. D in mm	B±3 in mm	L±3 in mm
1.313-06-08	12	9/16-18	19	6,0	21	52
1.313-08-08	12	3/4-16	24	9,0	37	69
1.313-10-08	12	7/8-14	27	10,0	36	67
1.313-08-10	16	3/4-16	24	9,0	22	56
1.313-10-10	16	7/8-14	27	12,0	37	71
1.313-12-10	16	1 1/16-12	32	13,0	45	79
1.313-10-12	19	7/8-14	27	12,0	40	79
1.313-12-12	19	1 1/16-12	32	15,0	21	61
1.313-16-12	19	1 5/16-12	38	15,0	22	62
1.313-12-16	25	1 1/16-12	32	15,0	25	71
1.313-16-16	25	1 5/16-12	41	21,0	24	70
1.313-20-16	25	1 5/8-12	55	21,0	48	94
1.313-16-20	31	1 5/16-12	41	21,0	50	104
1.313-20-20	31	1 5/8-12	55	27,0	30	85
1.313-24-20	31	1 7/8-12	60	27,0	47	102
1.313-24-24	38	1 7/8-12	60	32,0	35	93
1.313-32-32	51	2 1/2-12	75	44,5	39	114

Dietzel Hydraulik GmbH
Leedenstraße 10
04626 Löbichau

Tel.: +49 (36602) 140-140

E-Mail: vertrieb@dietzel-hydraulik.de

Pressure fittings

DKJ 45°

Updated at:
24.05.2022

Connection
Sealing head 74° inner cone with UN nut

Standard
ISO 8434-2

Application
TE / SN / SC / SN-K / PTFE flexible tubes

Material
Steel

Surface protection
Zinc-electroplated

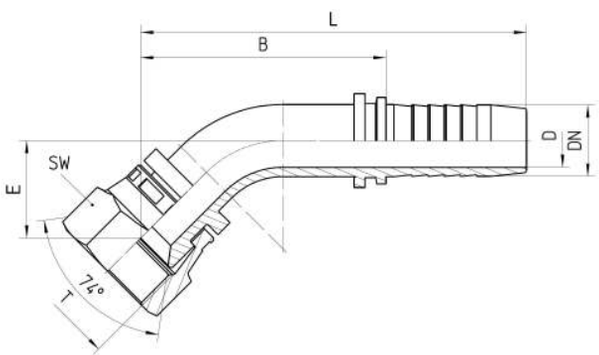

Order no.	DN in mm	T in UNF/UN	SW in mm	min. D in mm	E±3 in mm	B±3 in mm	L±3 in mm
1.343-04-04	06	7/16-20 UNF	15	4,0	13	38	66
1.343-05-04	06	1/2-20 UNF	17	4,0	14	40	68
1.343-04-05	08	7/16-20 UNF	17	4,0	20	44	71
1.343-05-05	08	1/2-20 UNF	17	5,5	17	46	74
1.343-06-05	08	9/16-18 UNF	19	5,5	18	47	75
1.343-05-06	10	1/2-20 UNF	17	4,0	21	42	72
1.343-06-06	10	9/16-18 UNF	19	7,0	19	51	81
1.343-08-06	10	3/4-16 UNF	22	7,0	15	51	81

Dietzel Hydraulik GmbH
Leedenstraße 10
04626 Löbichau

Tel.: +49 (36602) 140-140

E-Mail: vertrieb@dietzel-hydraulik.de

Order no.	DN in mm	T in UNF/UN	SW in mm	min. D in mm	E±3 in mm	B±3 in mm	L±3 in mm
1.343-06-08	12	9/16-18 UNF	19	6,0	25	55	86
1.343-08-08	12	3/4-16 UNF	24	9,0	27	57	88
1.343-10-08	12	7/8-14 UNF	27	10,0	21	51	82
1.343-08-10	16	3/4-16 UNF	24	9,0	30	71	105
1.343-10-10	16	7/8-14 UNF	27	12,0	35	68	102
1.343-12-10	16	1 1/16-12 UN	32	12,0	40	73	107
1.343-10-12	19	7/8-14 UNF	27	12,0	34	81	120
1.343-12-12	19	1 1/16-12 UN	32	15,0	27	67	107
1.343-16-12	19	1 5/16-12 UN	38	15,0	30	72	112
1.343-12-16	25	1 1/16-16 UN	32	15,0	45	96	142
1.343-16-16	25	1 5/16-12 UN	41	21,0	41	82	128
1.343-20-16	25	1 5/8-12 UNF	55	21,0	50	100	147
1.343-16-20	31	1 5/16-20 UN	41	21,0	37	114	168
1.343-20-20	31	1 5/8-12 UN	55	26,5	44	114	168
1.343-24-20	31	1 7/8-12 UN	60	27,0	51	133	187
1.343-24-24	38	1 7/8-12 UN	60	32,8	47	116	173
1.343-32-32	51	2 1/2-12 UN	75	44,5	61	128	202

Dietzel Hydraulik GmbH
Leedenstraße 10
04626 Löbichau

Tel.: +49 (36602) 140-140

E-Mail: vertrieb@dietzel-hydraulik.de

Pressure fittings

DKJ 90°

Updated at:
24.05.2022

Connection
Sealing head 74° inner cone with UN nut

Standard
ISO 8434-2

Application
TE / SN / SC / SN-K / PTFE flexible tubes

Material
Steel

Surface protection
Zinc-electroplated

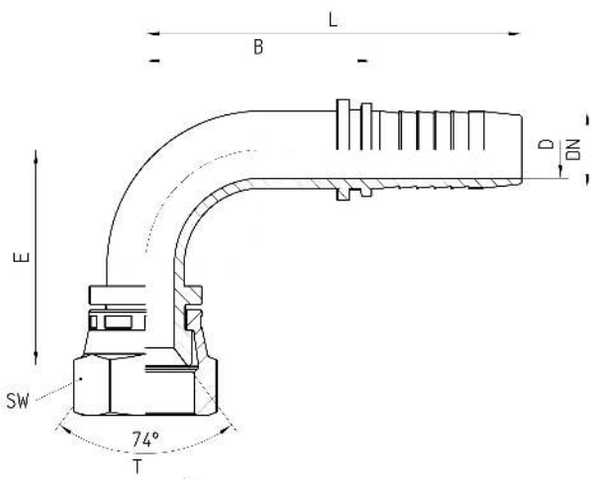

Order no.	DN in mm	T in UNF/UN	SW in mm	min. D in mm	E±3 in mm	B±3 in mm	L±3 in mm
1.353-04-04	06	7/16-20 UNF	15	4,0	24	25	53
1.353-05-04	06	1/2-20 UNF	17	4,0	25	25	53
1.353-04-05	08	7/16-20 UNF	17	4,0	37	30	57
1.353-05-05	08	1/2-20 UNF	17	4,0	30	29	57
1.353-06-05	08	9/16-18 UNF	19	4,0	31	29	57
1.353-05-06	10	1/2-20 UNF	17	4,0	37	30	60

Dietzel Hydraulik GmbH
Leedenstraße 10
04626 Löbichau

Tel.: +49 (36602) 140-140

E-Mail: vertrieb@dietzel-hydraulik.de

Order no.	DN in mm	T in UNF/UN	SW in mm	min. D in mm	E±3 in mm	B±3 in mm	L±3 in mm
1.353-06-06	10	9/16-18 UNF	19	7,0	32	31	61
1.353-08-06	10	3/4-16 UNF	22	7,0	30	30	60
1.353-06-08	12	9/16-18 UNF	19	6,0	49	42	73
1.353-08-08	12	3/4-16 UNF	24	9,0	50	42	73
1.353-10-08	12	7/8-14 UNF	27	10,0	41	42	73
1.353-08-10	16	3/4-16 UNF	24	9,0	53	52	86
1.353-10-10	16	7/8-14 UNF	27	12,0	58	52	86
1.353-12-10	16	1 1/16-12 UN	32	12,0	66	52	86
1.353-10-12	19	7/8-14 UN	27	12,0	60	60	99
1.353-12-12	19	1 1/16-12 UN	32	15,0	55	56	96
1.353-16-12	19	1 5/16-12 UN	38	15,0	60	56	96
1.353-12-16	25	1 1/16-12 UN	32	15,0	88	68	114
1.353-16-16	25	1 5/16-12 UN	41	21,0	81	68	114
1.353-20-16	25	1 5/8-12 UN	55	21,0	74	68	114
1.353-16-20	31	1 5/16-12 UN	41	21,0	75	94	148
1.353-20-20	31	1 5/8-12 UN	55	26,5	91	91	145
1.353-24-20	31	1 7/8-12 UN	60	27,0	103	112	166
1.353-24-24	38	1 7/8-12 UN	60	32,0	101	94	162
1.353-32-32	51	2 1/2-12 UN	75	44,5	132	132	205

Dietzel Hydraulik GmbH
Leedenstraße 10
04626 Löbichau

Tel.: +49 (36602) 140-140

E-Mail: vertrieb@dietzel-hydraulik.de

Pressure fittings

ORS straight

Updated at:
24.05.2022

Connection
Frontal UN male thread O-ring sealing

Standard
ISO 8434-3

Application
TE / SN / SC / SN-K / PTFE flexible tubes

Material
Steel

Surface protection
Zinc-electroplated

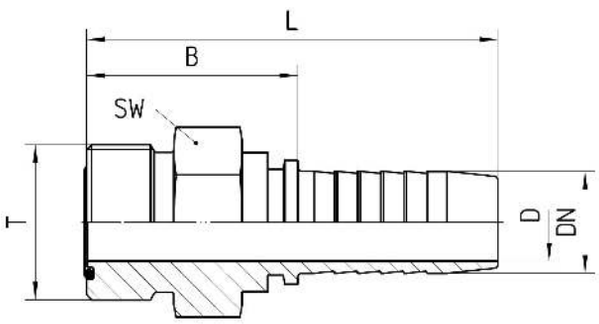

Order no.	DN in mm	T in UNF/UN/UNS	SW in mm	min. D in mm	B±3 in mm	L±3 in mm
1.380-04-04	06	9/16-18 UNF	17	4,0	24	51
1.380-06-05	08	11/16-16 UN	19	5,5	25	52
1.380-06-06	10	11/16-16 UN	19	7,0	25	55
1.380-08-08	12	13/16-16 UN	22	9,5	29	61
1.380-10-10	16	1-14 UNS	27	13,0	40	75
1.380-12-10	16	1 3/16-12 UN	32	13,0	43	77
1.380-12-12	19	1 3/16-12 UN	32	15,0	46	85
1.380-16-16	25	1 7/16-12 UN	41	20,5	50	96

Dietzel Hydraulik GmbH
Leedenstraße 10
04626 Löbichau

Tel.: +49 (36602) 140-140

E-Mail: vertrieb@dietzel-hydraulik.de

Order no.	DN in mm	T in UNF/UN/UNS	SW in mm	min. D in mm	B±3 in mm	L±3 in mm
1.380-20-20	31	1 11/16-12 UN	46	27,0	53	107
1.380-24-24	38	2-12 UN	55	32,0	56	113

Dietzel Hydraulik GmbH
Leedenstraße 10
04626 Löbichau

Tel.: +49 (36602) 140-140

E-Mail: vertrieb@dietzel-hydraulik.de

Pressure fittings

ORFS straight

Updated at:
24.05.2022

Connection
Flat sealing head with UN nut

Standard
ISO 8434-3

Application
TE / SN / SC / SN-K / PTFE flexible tubes

Material
Steel

Surface protection
Zinc-electroplated

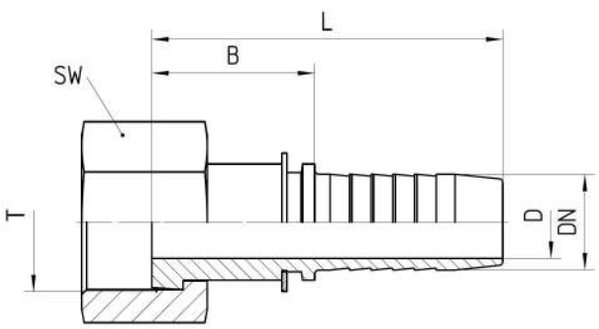

Order no.	DN in mm	T in UNF/UN/UNS	SW in mm	min. D in mm	B±3 in mm	L±3 in mm
1.315-04-04	06	9/16-18 UNF	17	4,0	22	49
1.315-06-04	06	11/16-16 UN	22	4,0	22	49
1.315-06-05	08	11/16-16 UN	22	5,5	22	49
1.315-04-06	10	9/16-18 UNF	17	4,0	22	51
1.315-06-06	10	11/16-16 UN	22	7,0	24	54
1.315-08-06	10	13/16-16 UN	24	7,0	22	52
1.315-06-08	12	11/16-16 UN	22	6,6	24	56
1.315-08-08	12	13/16-16 UN	24	10,0	21	52

Dietzel Hydraulik GmbH
Leedenstraße 10
04626 Löbichau

Tel.: +49 (36602) 140-140

E-Mail: vertrieb@dietzel-hydraulik.de

Order no.	DN in mm	T in UNF/UN/UNS	SW in mm	min. D in mm	B±3 in mm	L±3 in mm
1.315-10-08	12	1-14 UNS	30	10,0	25	56
1.315-08-10	16	13/16-16 UN	24	10,0	26	60
1.315-10-10	16	1-14 UNS	30	13,0	31	65
1.315-12-10	16	1 3/16-12 UN	36	13,0	27	61
1.315-12-12	19	1 3/16-12 UN	36	15,0	34	73
1.315-16-12	19	1 7/16-12 UN	41	15,0	30	69
1.315-16-16	25	1 7/16-12 UN	41	21,0	37	83
1.315-20-16	25	1 11/16-12 UN	50	21,0	34	80
1.315-20-20	31	1 11/16-12 UN	50	27,0	37	91
1.315-24-20	31	2-12 UN	60	27,0	38	92
1.315-24-24	38	2-12 UN	60	32,0	39	96

Dietzel Hydraulik GmbH
Leedenstraße 10
04626 Löbichau

Tel.: +49 (36602) 140-140

E-Mail: vertrieb@dietzel-hydraulik.de

Pressure fittings

ORFS 45°

Updated at:
11.01.2023

Connection
Flat sealing head with UN nut

Standard
ISO 8434-3

Application
TE / SN / SC / SN-K / PTFE flexible tubes

Material
Steel

Surface protection
Zinc-electroplated

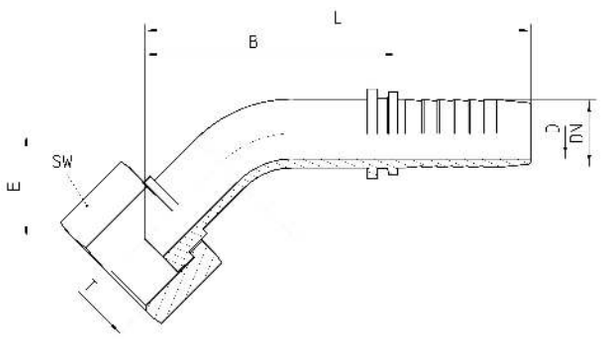

Order no.	DN in mm	T in UNF/UN/UNS	SW in mm	min. D in mm	E±3 in mm	B±3 in mm	L±3 in mm
1.345-04-04	06	9/16-18 UNF	17	4,0	13	35	62
1.345-06-04	06	11/16-16 UN	22	4,0	13	35	62
1.345-06-05	08	11/16-16 UN	22	5,5	15	37	64
1.345-04-06	10	9/16-18 UNF	17	4,0	18	50	80
1.345-06-06	10	11/16-16 UN	22	6,6	15	36	66
1.345-08-06	10	13/16-16 UN	24	7,0	15	37	67
1.345-06-08	12	11/16-16 UN	22	6,6	21	63	94
1.345-08-08	12	13/16-16 UN	24	10,0	20	49	80

Dietzel Hydraulik GmbH
Leedenstraße 10
04626 Löbichau

Tel.: +49 (36602) 140-140

E-Mail: vertrieb@dietzel-hydraulik.de

Order no.	DN in mm	T in UNF/UN/UNS	SW in mm	min. D in mm	E±3 in mm	B±3 in mm	L±3 in mm
1.345-10-08	12	1-14 UNS	30	10,0	21	47	78
1.345-08-10	16	13/16-16 UN	24	10,0	25	66	100
1.345-10-10	16	1-14 UNS	30	12,6	27	60	94
1.345-12-10	16	1 3/16-12 UN	36	12,6	27	62	95
1.345-12-12	19	1 3/16-12 UN	36	14,8	29	75	114
1.345-16-12	19	1 7/16-12 UN	41	14,8	33	75	114
1.345-16-16	25	1 7/16-12 UN	41	21,0	37	83	129
1.345-20-16	25	1 11/16-12 UN	50	21,0	35	83	129
1.345-20-20	31	1 11/16-12 UN	50	26,5	45	114	168
1.345-24-20	31	2-12 UN	60	26,5	45	114	168
1.345-24-24	38	2-12 UN	60	32,8	55	122	179

Dietzel Hydraulik GmbH
Leedenstraße 10
04626 Löbichau

Tel.: +49 (36602) 140-140

E-Mail: vertrieb@dietzel-hydraulik.de

Pressure fittings
ORFS 90°

Updated at:
24.05.2022

Connection
Flat sealing head with UN nut

Standard
ISO 8434-3

Application
TE / SN / SC / SN-K / PTFE flexible tubes

Material
Steel

Surface protection
Zinc-electroplated

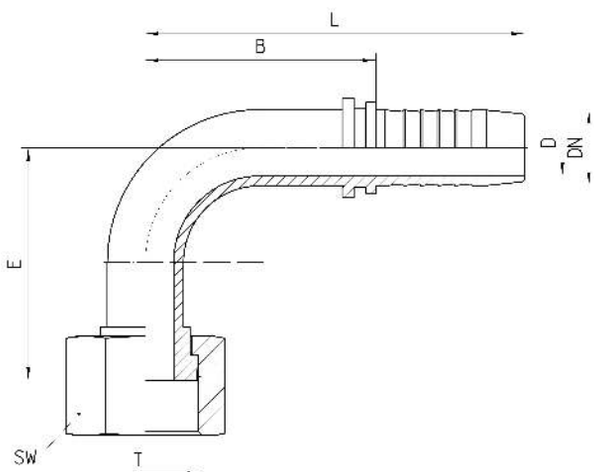

Order no.	DN in mm	T in UNF/UN/UNS	SW in mm	min. D in mm	E±3 in mm	B±3 in mm	L±3 in mm
1.355-04-04	06	9/16-18 UNF	17	4,0	27	26	53
1.355-06-04	06	11/16-16 UN	22	4,0	27	26	53
1.355-06-05	08	11/16-16 UN	22	5,5	28	30	57
1.355-04-06	10	9/16-18 UNF	17	4,0	30	43	73
1.355-06-06	10	11/16-16 UN	22	6,6	29	30	60
1.355-08-06	10	13/16-16 UN	24	7,0	30	30	60
1.355-06-08	12	11/16-16 UN	22	6,6	45	49	80

Dietzel Hydraulik GmbH
Leedenstraße 10
04626 Löbichau

Tel.: +49 (36602) 140-140

E-Mail: vertrieb@dietzel-hydraulik.de

Order no.	DN in mm	T in UNF/UN/UNS	SW in mm	min. D in mm	E±3 in mm	B±3 in mm	L±3 in mm
1.355-08-08	12	13/16-16 UN	24	10,0	39	42	73
1.355-10-08	12	1-14 UNS	30	10,0	39	42	73
1.355-08-10	16	13/16-16 UN	24	10,0	40	52	86
1.355-10-10	16	1-14 UNS	30	12,6	49	52	86
1.355-12-10	16	1 3/16-12 UN	36	12,6	51	52	86
1.355-12-12	19	1 3/16-12 UN	36	14,8	61	60	99
1.355-16-12	19	1 7/16-12 UN	41	14,8	62	60	99
1.355-16-16	25	1 7/16-12 UN	41	21,0	67	68	114
1.355-20-16	25	1 11/16-12 UN	50	21,1	70	68	114
1.355-20-20	31	1 11/16-12 UN	50	26,5	85	94	148
1.355-24-20	31	2-12 UN	60	26,5	105	94	148
1.355-24-24	38	2-12 UN	60	32,8	104	105	162

Dietzel Hydraulik GmbH
Leedenstraße 10
04626 Löbichau

Tel.: +49 (36602) 140-140

E-Mail: vertrieb@dietzel-hydraulik.de

Pressure fittings

AGN straight

Updated at:
24.05.2022

Connection
NPT male thread coned sealing

Application
TE / SN / SC / SN-K / PTFE flexible tubes

Material
Steel

Surface protection
Zinc-electroplated

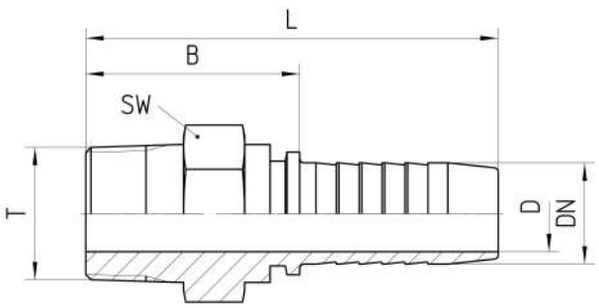

Order no.	DN in mm	T in NPTF	SW in mm	min. D in mm	B±3 in mm	L±3 in mm
1.300-02-04	06	1/8 - 27 NPTF	12	4,0	22	50
1.300-04-04	06	1/4 - 18 NPTF	15	4,0	28	56
1.300-06-04	06	3/8 - 18 NPTF	19	4,0	28	56
1.300-04-05	08	1/4 - 18 NPTF	15	5,5	28	56
1.300-06-05	08	3/8 - 18 NPTF	19	5,5	28	56
1.300-04-06	10	1/4 - 18 NPTF	17	7,0	27	57
1.300-06-06	10	3/8 - 18 NPTF	19	7,0	28	58
1.300-08-06	10	1/2 - 14 NPTF	22	7,0	34	64
1.300-06-08	12	3/8 - 18 NPTF	19	7,0	44	75
1.300-08-08	12	1/2 - 14 NPTF	22	10,0	49	80

Dietzel Hydraulik GmbH
Leedenstraße 10
04626 Löbichau

Tel.: +49 (36602) 140-140

E-Mail: vertrieb@dietzel-hydraulik.de

Order no.	DN in mm	T in NPTF	SW in mm	min. D in mm	B±3 in mm	L±3 in mm
1.300-08-10	16	1/2 - 14 NPTF	22	13,0	40	74
1.300-12-10	16	3/4 - 14 NPTF	27	13,0	50	84
1.300-12-12	19	3/4 - 14 NPTF	27	15,0	42	81
1.300-16-12	19	1 - 11 1/2 NPTF	41	15,0	50	89
1.300-16-16	25	1 - 11 1/2 NPTF	41	21,0	50	96
1.300-16-20	31	1 - 11 1/2 NPTF	41	21,0	55	110
1.300-20-20	31	1 1/4 - 11 1/2 NPTF	46	27,0	67	121
1.300-24-24	38	1 1/2 - 11 1/2 NPTF	50	32,0	49	117
1.300-32-32	51	2 - 11 1/2 NPTF	65	44,5	56	131

Dietzel Hydraulik GmbH
Leedenstraße 10
04626 Löbichau

Tel.: +49 (36602) 140-140

E-Mail: vertrieb@dietzel-hydraulik.de

Pressure fittings

SFL straight

Updated at:
24.05.2022

Connection
SAE flange 3000PSI (L series)

Standard
ISO 6162-1

Application
TE / SN / SC / SN-K / PTFE flexible tubes

Material
Steel

Surface protection
Zinc-electroplated

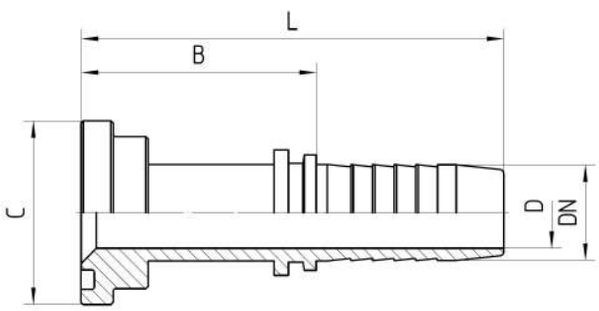

Order no.	DN in mm	flange in inch	C in mm	min. D in mm	B±3 in mm	L±3 in mm
1.420-08-08	12	1/2	30,2	10,0	45	76
1.420-12-08	12	3/4	38,1	10,0	48	79
1.420-08-10	16	1/2	30,2	12,6	45	79
1.420-12-10	16	3/4	38,1	12,6	44	78
1.420-08-12	19	1/2	30,2	13,5	52	91
1.420-12-12	19	3/4	38,1	14,8	49	88
1.420-16-12	19	1	44,5	14,8	52	91
1.420-12-16	25	3/4	38,1	20,0	54	100

Dietzel Hydraulik GmbH
Leedenstraße 10
04626 Löbichau

Tel.: +49 (36602) 140-140

E-Mail: vertrieb@dietzel-hydraulik.de

Order no.	DN in mm	flange in inch	C in mm	min. D in mm	B±3 in mm	L±3 in mm
1.420-16-16	25	1	44,5	21,1	52	98
1.420-20-16	25	1 1/4	50,8	21,1	52	98
1.420-16-20	31	1	44,5	26,5	62	116
1.420-20-20	31	1 1/4	50,8	26,5	60	114
1.420-24-20	31	1 1/2	60,3	26,5	62	116
1.420-20-24	38	1 1/4	50,8	32,5	61	118
1.420-24-24	38	1 1/2	60,3	32,8	62	119
1.420-32-24	38	2	71,4	32,8	63	120
1.420-24-32	51	1 1/2	60,3	34,5	64	139
1.420-32-32	51	2	71,4	44.5	62	137
1.420-40-32	51	2 1/2	84,1	44,5	64	139
1.420-32-36	60	2	71,4	51,0	80	160
1.420-40-36	60	2 1/2	84,1	52,0	79	158
1.420-48-36	60	3	101,6	52,0	80	160
1.420-32-40	63	2	71,4	51,0	79	159
1.420-40-40	63	2 1/2	84,1	52,0	76	156
1.420-48-40	63	3	101,6	52,0	77	157
1.420-40-48	76	2 1/2	84,1	64,0	90	165
1.420-48-48	76	3	101,6	68,0	90	165
1.420-56-48	76	3 1/2	114,3	68,0	101	176

Dietzel Hydraulik GmbH
Leedenstraße 10
04626 Löbichau

Tel.: +49 (36602) 140-140

E-Mail: vertrieb@dietzel-hydraulik.de

Pressure fittings

SFL 45°

Updated at:
24.05.2022

Connection
SAE flange 3000PSI (L series)

Standard
ISO 6162-1

Application
TE / SN / SC / SN-K / PTFE flexible tubes

Material
Steel

Surface protection
Zinc-electroplated

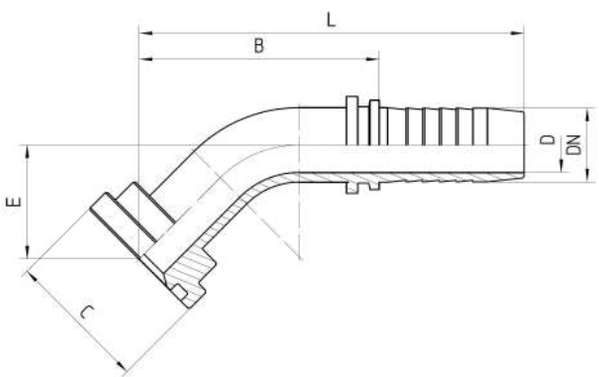

Order no.	DN in mm	flange in inch	C in mm	min. D in mm	E±3 in mm	B±3 in mm	L±3 in mm
1.450-08-08	12	1/2	30,2	10,0	21	49	80
1.450-12-08	12	3/4	38,1	10,0	23	51	82
1.450-08-10	16	1/2	30,2	12,6	27	61	95
1.450-12-10	16	3/4	38,1	12,6	25	63	97
1.450-08-12	19	1/2	30,2	13,5	31	76	115
1.450-12-12	19	3/4	38,1	14,8	31	76	115
1.450-16-12	19	1	44,5	14,8	31	75	114
1.450-12-16	25	3/4	38,1	20,0	36	81	127

Dietzel Hydraulik GmbH
Leedenstraße 10
04626 Löbichau

Tel.: +49 (36602) 140-140

E-Mail: vertrieb@dietzel-hydraulik.de

Order no.	DN in mm	flange in inch	C in mm	min. D in mm	E±3 in mm	B±3 in mm	L±3 in mm
1.450-16-16	25	1	44,5	26,1	32	82	128
1.450-20-16	25	1 1/4	50,8	21,1	34	81	127
1.450-16-20	31	1	44,5	26,5	45	116	170
1.450-20-20	31	1 1/4	50,8	26,5	44	104	158
1.450-24-20	31	1 1/2	60,3	26,5	45	106	160
1.450-20-24	38	1 1/4	50,8	32,5	43	111	168
1.450-24-24	38	1 1/2	60,3	32,8	53	112	169
1.450-32-24	38	2	71,4	32,8	48	115	172
1.450-24-32	51	1 1/2	60,3	34,5	52	130	205
1.450-32-32	51	2	71,4	44,5	52	130	205
1.450-40-32	51	2 1/2	84,1	44,5	52	130	205
1.450-32-36	60	2	71,4	49,0	55	161	241
1.450-40-36	60	2 1/2	84,1	52,0	54	160	240
1.450-48-36	60	3	101,6	52,0	54	161	241
1.450-32-40	63	2	71,4	51,0	55	119	199
1.450-40-40	63	2 1/2	84,1	52,0	53	148	228
1.450-40-48	76	2 1/2	84,1	64,0	53	147	222
1.450-48-48	76	3	101,6	68,0	52	149	224
1.450-56-48	76	3 1/2	114,3	68,0	70	166	241

Dietzel Hydraulik GmbH
Leedenstraße 10
04626 Löbichau

Tel.: +49 (36602) 140-140

E-Mail: vertrieb@dietzel-hydraulik.de

Pressure fittings

SFL 90°

Updated at:
24.05.2022

Connection
SAE flange 3000PSI (L series)

Standard
ISO 6162-1

Application
TE / SN / SC / SN-K / PTFE flexible tubes

Material
Steel

Surface protection
Zinc-electroplated

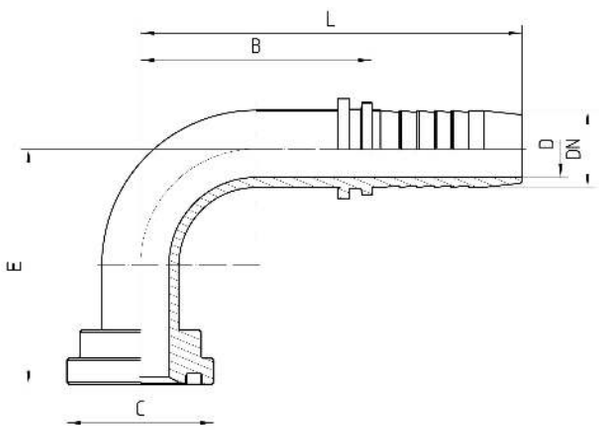

Order no.	DN in mm	flange in inch	C in mm	min. D in mm	E±3 in mm	B±3 in mm	L±3 in mm
1.470-08-08	12	1/2	30,2	10,0	39	42	73
1.470-12-08	12	3/4	38,1	10,0	39	42	73
1.470-08-10	16	1/2	30,2	12,6	49	53	87
1.470-12-10	16	3/4	38,1	12,6	49	53	87
1.470-08-12	19	1/2	30,2	13,5	61	61	100
1.470-12-12	19	3/4	38,1	14,8	61	62	101
1.470-16-12	19	1	44,5	14,8	61	62	101
1.470-12-16	25	3/4	38,1	20,0	68	68	114

Dietzel Hydraulik GmbH
Leedenstraße 10
04626 Löbichau

Tel.: +49 (36602) 140-140

E-Mail: vertrieb@dietzel-hydraulik.de

Order no.	DN in mm	flange in inch	C in mm	min. D in mm	E±3 in mm	B±3 in mm	L±3 in mm
1.470-16-16	25	1	44,5	21,1	70	68	114
1.470-20-16	25	1 1/4	50,8	21,1	70	68	114
1.470-16-20	31	1	44,5	26,5	82	94	148
1.470-20-20	31	1 1/4	50,8	26,5	83	90	144
1.470-24-20	31	1 1/2	60,3	26,5	84	90	144
1.470-20-24	38	1 1/4	50,8	32,5	109	105	162
1.470-24-24	38	1 1/2	60,3	32,8	108	106	163
1.470-32-24	38	2	71,4	32,8	108	105	162
1.470-24-32	51	1 1/2	60,3	34,5	118	130	205
1.470-32-32	51	2	71,4	44,5	114	130	205
1.470-40-32	51	2 1/2	84,1	44,5	117	130	205
1.470-32-36	60	2	71,4	49,0	128	173	253
1.470-40-36	60	2 1/2	84,1	52,0	129	173	253
1.470-48-36	60	3	101,6	52,0	130	173	253
1.470-32-40	63	2	71,4	51.0	122	110	190
1.470-40-40	63	2 1/2	84,1	52.0	120	155	235
1.470-40-48	76	2 1/2	84,1	64,0	132	150	225
1.470-48-48	76	3	101,6	68,0	132	150	225
1.470-56-48	76	3 1/2	114,3	68,0	165	170	245

Dietzel Hydraulik GmbH
Leedenstraße 10
04626 Löbichau

Tel.: +49 (36602) 140-140

E-Mail: vertrieb@dietzel-hydraulik.de

Pressure fittings

SFS straight

Updated at:
24.05.2022

Connection
SAE flange 6000PSI (S series)

Standard
ISO 6162-2

Application
TE / SN / SC / SN-K / PTFE flexible tubes

Material
Steel

Surface protection
Zinc-electroplated

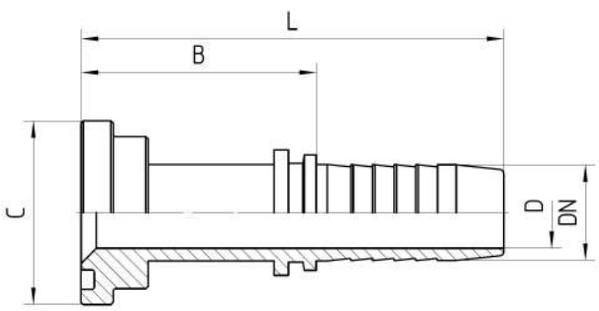

Order no.	DN in mm	flange in inch	C in mm	min. D in mm	B±3 in mm	L±3 in mm
1.421-08-08	12	1/2	31,7	10,0	46	77
1.421-12-08	12	3/4	41,3	10,0	47	78
1.421-08-10	16	1/2	31,7	12,6	46	80
1.421-12-10	16	3/4	41,3	12,6	44	78
1.421-08-12	19	1/2	31,7	14,0	54	92
1.421-12-12	19	3/4	41,3	14,8	52	91
1.421-16-12	19	1	47,6	14,8	53	92
1.421-12-16	25	3/4	41,3	20,0	55	101

Dietzel Hydraulik GmbH
Leedenstraße 10
04626 Löbichau

Tel.: +49 (36602) 140-140

E-Mail: vertrieb@dietzel-hydraulik.de

Order no.	DN in mm	flange in inch	C in mm	min. D in mm	B±3 in mm	L±3 in mm
1.421-16-16	25	1	47,6	21,1	56	102
1.421-20-16	25	1 1/4	54,0	21,1	52	98
1.421-16-20	31	1	47,6	26,5	64	118
1.421-20-20	31	1 1/4	54,0	26,5	61	115
1.421-24-20	31	1 1/2	63,5	26,5	66	120
1.421-20-24	38	1 1/4	54,0	32,5	63	120
1.421-24-24	38	1 1/2	63,5	32,8	64	121
1.421-32-24	38	2	79,4	32,8	75	132
1.421-24-32	51	1 1/2	63,5	32,5	69	144
1.421-32-32	51	2	79,4	44,5	76	151

Dietzel Hydraulik GmbH
Leedenstraße 10
04626 Löbichau

Tel.: +49 (36602) 140-140

E-Mail: vertrieb@dietzel-hydraulik.de

Pressure fittings

SFS 45°

Updated at:
24.05.2022

Connection
SAE flange 6000PSI (S series)

Standard
ISO 6162-2

Application
TE / SN / SC / SN-K / PTFE flexible tubes

Material
Steel

Surface protection
Zinc-electroplated

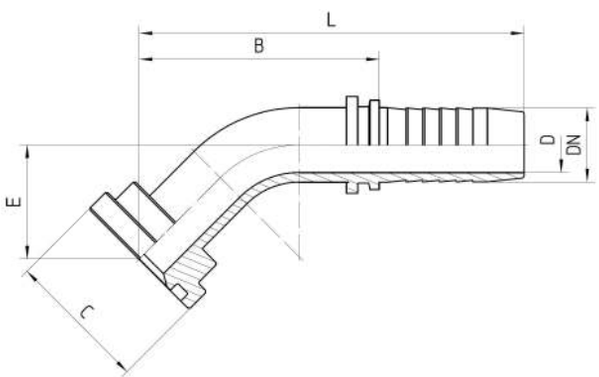

Order no.	DN in mm	flange in inch	C in mm	min. D in mm	E±3 in mm	B±3 in mm	L±3 in mm
1.451-08-08	12	1/2	31,7	10,0	24	49	80
1.451-12-08	12	3/4	41,3	10,0	23	51	82
1.451-08-10	16	1/2	31,7	12,6	29	62	96
1.451-12-10	16	3/4	41,3	12,6	27	63	97
1.451-08-12	19	1/2	31,7	14,0	32	76	115
1.451-12-12	19	3/4	41,3	14,8	33	74	113
1.451-16-12	19	1	47,6	14,8	33	75	114
1.451-12-16	25	3/4	41,3	20,0	34	75	121

Dietzel Hydraulik GmbH
Leedenstraße 10
04626 Löbichau

Tel.: +49 (36602) 140-140

E-Mail: vertrieb@dietzel-hydraulik.de

Order no.	DN in mm	flange in inch	C in mm	min. D in mm	E±3 in mm	B±3 in mm	L±3 in mm
1.451-16-16	25	1	47,6	21,1	36	83	129
1.451-20-16	25	1 1/4	54,0	21,1	35	84	130
1.451-16-20	31	1	47,6	26,5	50	106	160
1.451-20-20	31	1 1/4	54,0	26,5	44	105	159
1.451-24-20	31	1 1/2	63,5	26,5	49	103	157
1.451-20-24	38	1 1/4	54,0	32,5	47	104	161
1.451-24-24	38	1 1/2	63,5	32,5	53	112	169
1.451-32-24	38	2	79,4	32,8	54	115	172
1.451-24-32	51	1 1/2	63,5	32,5	53	112	187
1.451-32-32	51	2	79,4	44,5	62	139	214

Dietzel Hydraulik GmbH
Leedenstraße 10
04626 Löbichau

Tel.: +49 (36602) 140-140

E-Mail: vertrieb@dietzel-hydraulik.de

Pressure fittings

SFS 90°

Updated at:
24.05.2022

Connection
SAE flange 6000PSI (S series)

Standard
ISO 6162-2

Application
TE / SN / SC / SN-K / PTFE flexible tubes

Material
Steel

Surface protection
Zinc-electroplated

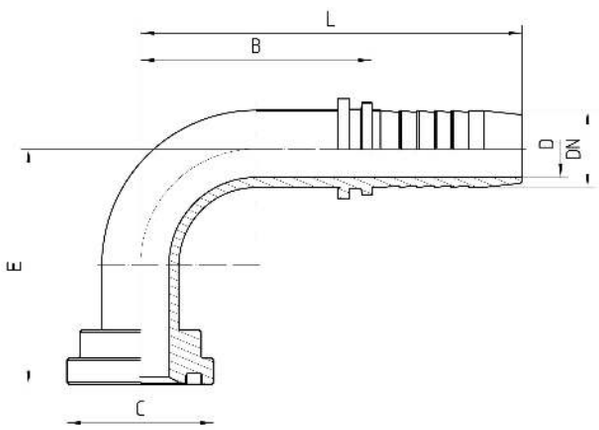

Order no.	DN in mm	flange in inch	C in mm	min. D in mm	E±3 in mm	B±3 in mm	L±3 in mm
1.471-08-08	12	1/2	31,7	10,0	41	42	73
1.471-12-08	12	3/4	41,3	10,0	42	40	71
1.471-08-10	16	1/2	31,7	12,6	50	53	87
1.471-12-10	16	3/4	41,3	12,6	52	52	86
1.471-08-12	19	1/2	31,7	14,0	64	60	99
1.471-12-12	19	3/4	41,3	14,8	62	60	99
1.471-16-12	19	1	47,6	14,8	65	60	99
1.471-12-16	25	3/4	41,3	20,0	72	68	114

Dietzel Hydraulik GmbH
Leedenstraße 10
04626 Löbichau

Tel.: +49 (36602) 140-140

E-Mail: vertrieb@dietzel-hydraulik.de

Order no.	DN in mm	flange in inch	C in mm	min. D in mm	E±3 in mm	B±3 in mm	L±3 in mm
1.471-16-16	25	1	47,6	21,1	73	68	114
1.471-20-16	25	1 1/4	54,0	21,1	71	68	114
1.471-16-20	31	1	47,6	26,5	86	94	148
1.471-20-20	31	1 1/4	54,0	26,5	88	94	148
1.471-24-20	31	1 1/2	63,5	26,5	88	94	148
1.471-20-24	38	1 1/4	54,0	32,5	104	105	162
1.471-24-24	38	1 1/2	63,5	32,8	104	105	162
1.471-32-24	38	2	79,4	32,8	104	105	162
1.471-24-32	51	1 1/2	63,5	32,5	124	130	205
1.471-32-32	51	2	79,4	44,5	124	130	205

Dietzel Hydraulik GmbH
Leedenstraße 10
04626 Löbichau

Tel.: +49 (36602) 140-140

E-Mail: vertrieb@dietzel-hydraulik.de

Pressure fittings

Hose coupling

Updated at:
24.05.2022

Connection
Flexible tube connectors

Application
TE / SN / SC / SN-K / PTFE flexible tubes

Material
Steel

Surface protection
Zinc-electroplated

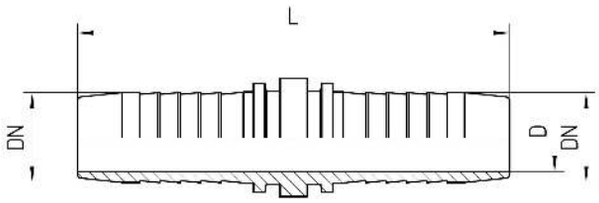

Order no.	DN in mm	min.D in mm	L±5 in mm
1.001-04-04	06	4,0	69
1.001-05-05	08	5,5	68
1.001-06-06	10	7,0	74
1.001-08-08	12	10,0	79
1.001-10-10	16	13,0	84
1.001-12-12	19	14,8	96
1.001-16-16	25	21,0	112
1.001-20-20	31	27,0	129
1.001-24-24	38	33,0	136
1.001-32-32	51	45,0	176

Dietzel Hydraulik GmbH
Leedenstraße 10
04626 Löbichau

Tel.: +49 (36602) 140-140

E-Mail: vertrieb@dietzel-hydraulik.de

Order no.	DN in mm	min.D in mm	L±5 in mm
1.001-36-36	60	52,0	197
1.001-48-48	76	68,0	180

Dietzel Hydraulik GmbH
Leedenstraße 10
04626 Löbichau

Tel.: +49 (36602) 140-140

E-Mail: vertrieb@dietzel-hydraulik.de

Pressure fittings

Banjo fitting metric

Updated at:
24.05.2022

Connection
Ring fitting for metric hollow screws (M)

Standard
DIN 7642

Application
TE / SN / SC / SN-K / PTFE flexible tubes

Material
Steel

Surface protection
Zinc-electroplated

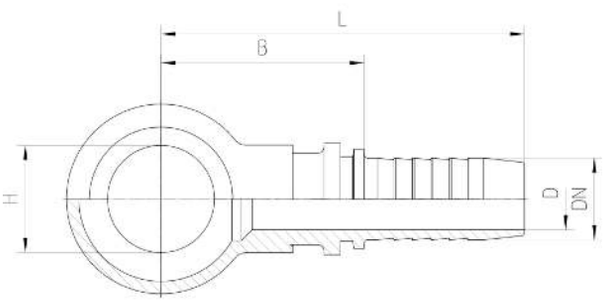

Order no.	DN in mm	resp. banjo bolt acc. to DIN 7643 H	H in mm	min. D in mm	B±3 in mm	L±3 in mm
1.090-10-04	06	M 10x1.0	10,2	3,5	30	57
1.090-12-04	06	M 12x1.5	12,2	4,0	32	59
1.090-14-04	06	M 14x1.5	14,2	4,0	33	61
1.090-10-05	08	M 10x1.0	10,2	4,0	29	57
1.090-12-05	08	M 12x1.5	12,2	5,5	31	59
1.090-14-05	08	M 14x1.5	14,2	5,5	33	61
1.090-16-05	08	M 16x1.5	16,2	5,5	35	63
1.090-12-06	10	M 12x1.5	12,2	5,5	31	61

Dietzel Hydraulik GmbH
Leedenstraße 10
04626 Löbichau

Tel.: +49 (36602) 140-140

E-Mail: vertrieb@dietzel-hydraulik.de

Order no.	DN in mm	resp. banjo bolt acc. to DIN 7643 H	H in mm	min. D in mm	B±3 in mm	L±3 in mm
1.090-14-06	10	M 14x1.5	14,2	7,0	33	63
1.090-16-06	10	M 16x1.5	16,2	7,0	35	65
1.090-18-06	10	M 18x1.5	18,2	7,0	37	67
1.090-14-08	12	M 14x1.5	14,2	7,0	35	67
1.090-16-08	12	M 16x1.5	16,2	7,0	37	69
1.090-18-08	12	M 18x1.5	18,2	10,0	39	71
1.090-22-08	12	M 22x1.5	22,2	10,0	42	74
1.090-16-10	16	M 16x1.5	16,2	7,0	39	73
1.090-18-10	16	M 18x1.5	18,2	10,0	41	75
1.090-22-10	16	M 22x1.5	22,2	13,0	44	78
1.090-26-10	16	M 26x1.5	26,2	13,0	47	81
1.090-18-12	19	M 18x1.5	18,2	10,0	44	83
1.090-22-12	19	M 22x1.5	22,2	13,0	47	86
1.090-26-12	19	M 26x1.5	26,2	15,0	50	89
1.090-22-16	25	M 22x1.5	22,2	15,0	50	97
1.090-26-16	25	M 26x1.5	26,2	15,0	53	100
1.090-26-20	31	M 26x1.5	26,2	15,0	56	111
1.090-30-20	31	M 30x1.5	30,2	21,0	60	115

Dietzel Hydraulik GmbH
Leedenstraße 10
04626 Löbichau

Tel.: +49 (36602) 140-140

E-Mail: vertrieb@dietzel-hydraulik.de

Pressure fittings

Banjo fitting by inches

Updated at:
24.05.2022

Connection
Ring fitting for BSP hollow screws (G)

Standard
DIN 7642

Application
TE / SN / SC / SN-K / PTFE flexible tubes

Material
Steel

Surface protection
Zinc-electroplated

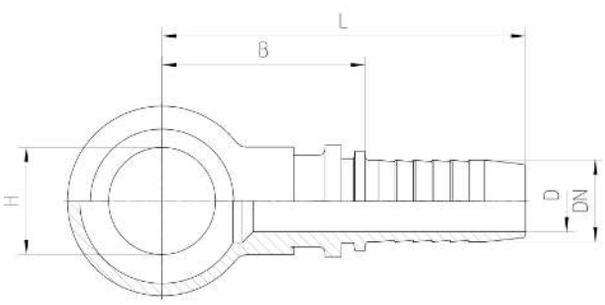

Order no.	DN in mm	matching banjo bolt H	H in mm	min.D in mm	B±3 in mm	L±3 in mm
1.091-1/8-04	06	G 1/8	10,2	3,5	30	57
1.091-1/4-04	06	G 1/4	14,2	4,0	33	61
1.091-1/8-05	08	G 1/8	10,2	4,0	29	57
1.091-1/4-05	08	G 1/4	14,2	5,5	33	61
1.091-3/8-05	08	G 3/8	16,8	5,5	35	63
1.091-1/4-06	10	G 1/4	14,2	7,0	33	63
1.091-3/8-06	10	G 3/8	16,8	7,0	35	65
1.091-1/4-08	12	G 1/4	14,2	7,0	35	67

Dietzel Hydraulik GmbH
Leedenstraße 10
04626 Löbichau

Tel.: +49 (36602) 140-140

E-Mail: vertrieb@dietzel-hydraulik.de

Order no.	DN in mm	matching banjo bolt H	H in mm	min.D in mm	B±3 in mm	L±3 in mm
1.091-3/8-08	12	G 3/8	16,8	7,0	37	69
1.091-1/2-08	12	G 1/2	21,1	10,0	42	74
1.091-3/8-10	16	G 3/8	16,8	9,0	39	73
1.091-1/2-10	16	G 1/2	21,1	13,0	44	78
1.091-3/4-10	16	G 3/4	26,5	13,0	47	81
1.091-1/2-12	19	G 1/2	21,1	13,0	47	86
1.091-3/4-12	19	G 3/4	26,5	15,0	50	89
1.091-1/2-16	25	G 1/2	21,1	13,0	50	97
1.091-3/4-16	25	G 3/4	26,5	15,0	53	100
1.091-3/4-20	31	G 3/4	26,5	15,0	56	111
1.091-1/1-20	31	G 1	33,4	21,0	60	115

Dietzel Hydraulik GmbH
Leedenstraße 10
04626 Löbichau

Tel.: +49 (36602) 140-140

E-Mail: vertrieb@dietzel-hydraulik.de

Pressure fittings

Wash cleaner female Wash cleaner female

Updated at:
24.05.2022

Connection
Washing machine nipple with metric nut

Application
TE / SN / SC / SN-K / PTFE flexible tubes

Material
Steel

Surface protection
Zinc-electroplated

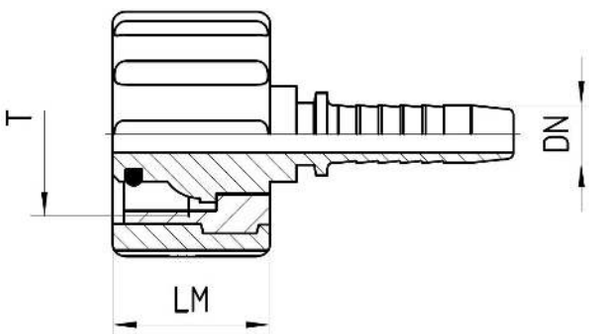

Order no.	DN in mm	T	LM in mm
1.021-04	06	M 22x1.5	19,5
1.021-04/M21x1.5	06	M 21x1.5	19,5
1.022-04	06	M 22x1.5	21,6
1.021-05	08	M 22x1.5	19,5
1.021-05/M21x1.5	08	M 21x1.5	19,5
1.022-05	08	M 22x1.5	21,6
1.021-06	10	M 22x1.5	19,5
1.021-06/M21x1.5	10	M 21x1.5	19,5

Dietzel Hydraulik GmbH
Leedenstraße 10
04626 Löbichau

Tel.: +49 (36602) 140-140

E-Mail: vertrieb@dietzel-hydraulik.de

Order no.	DN in mm	T	LM in mm
1.022-06	10	M 22x1.5	21,6

Dietzel Hydraulik GmbH
Leedenstraße 10
04626 Löbichau

Tel.: +49 (36602) 140-140

E-Mail: vertrieb@dietzel-hydraulik.de

Pressure fittings

Wash cleaner female for pistol application

Updated at:
24.05.2022

Connection
Washing mashing nipple for pistol installation

Application
TE / SN / SC / SN-K / PTFE flexible tubes

Material
Steel

Surface protection
Zinc-electroplated

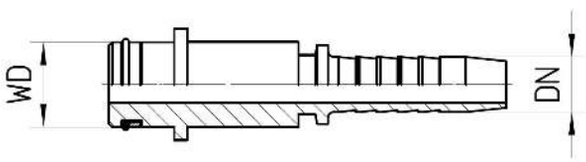

Order no.	DN in mm	WD in mm
1.023-04	06	10
1.023-05	08	10

Dietzel Hydraulik GmbH
Leedenstraße 10
04626 Löbichau

Tel.: +49 (36602) 140-140

E-Mail: vertrieb@dietzel-hydraulik.de

Pressure fittings

Wash cleaner female with axial bearing for pistol application

Updated at:
24.05.2022

Connection
Washing machine nipple for pistol installtion with axial bearing

Application
TE / SN / SC / SN-K / PTFE flexible tubes

Material
Steel

Surface protection
Zinc-electroplated

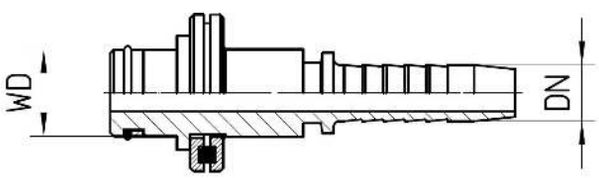

Order no.	DN in mm	WD in mm
1.024-04	06	11
1.024-05	08	11

Dietzel Hydraulik GmbH
Leedenstraße 10
04626 Löbichau

Tel.: +49 (36602) 140-140

E-Mail: vertrieb@dietzel-hydraulik.de

Pressure fittings

Combi NO-SKIVE (101)

Updated at:
24.05.2022

Connection
Combination NO-SKIVE press holder for dH1000

Application
dH1000 SN / SC / SN-K flexible tubes

Material
Steel

Surface protection
Zinc-electroplated

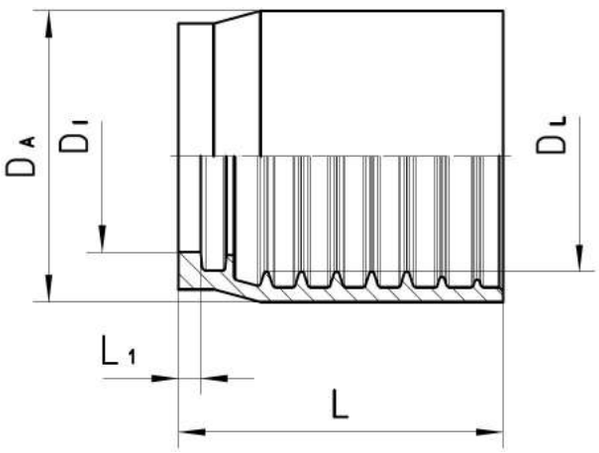

Order no.	DN in mm	DA in mm	DI in mm	DL in mm	L in mm	L1 in mm	Note
101-04	06	22,0	11,3	15,5	30,0	2,4	*
101-05	08	24,0	13,0	17,5	30,0	2,4	*
101-06	10	27,0	14,5	19,6	32,0	2,4	*
101-08	12	30,0	19,0	22,9	34,0	2,5	**
101-10	16	34,0	21,5	26,1	37,0	2,5	**
101-12	19	38,0	24,8	30,1	42,5	2,9	**
101-16	25	48,0	30,7	39,0	51,0	3,8	*
101-20	31	60,0	38,5	49,7	53,0	3,9	*
101-24	38	67,0	44,0	56,0	57,0	4,2	*

Dietzel Hydraulik GmbH
Leedenstraße 10
04626 Löbichau

Tel.: +49 (36602) 140-140

E-Mail: vertrieb@dietzel-hydraulik.de

Order no.	DN in mm	DA in mm	DI in mm	DL in mm	L in mm	L1 in mm	Note
101-32	51	81,0	57,0	68,8	72,0	5,0	*

Note
* only for 1SN /2SN hoses acc. to DIN EN 853 and 2SC hoses acc. to DIN EN 857 ** for 1SN/2SN hoses acc. to DIN EN 853 and for 1SC/2SC hoses acc. to DIN EN 857

Dietzel Hydraulik GmbH
Leedenstraße 10
04626 Löbichau

Tel.: +49 (36602) 140-140

E-Mail: vertrieb@dietzel-hydraulik.de

Pressure fittings

NO-SKIVE 1SC (101 1SC)

Updated at:
24.05.2022

Connection
NO-SKIVE 1SC press holder for dH1000

Application
dH1000 1SC flexible tubes

Material
Steel

Surface protection
Zinc-electroplated

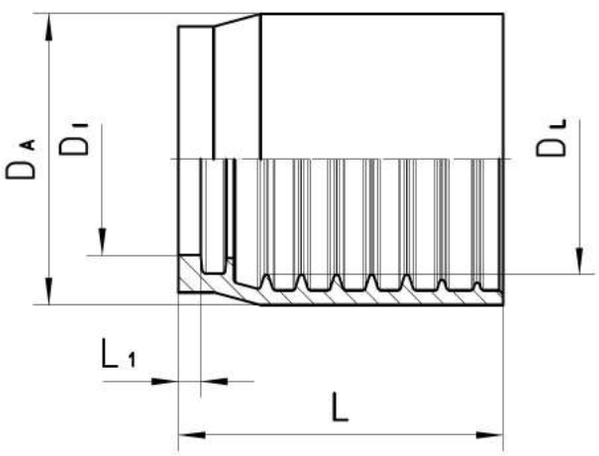

Order no.	DN in mm	DA in mm	DI in mm	DL in mm	L in mm	L1 in mm	Note
101-04-1SC	06	20,0	12,0	14,0	30,0	2,3	***
101-05-1SC	08	22,0	13,0	14,8	30,0	2,3	***
101-06-1SC	10	24,0	14,5	17,2	32,0	2,4	***
101-16-1SC	25	44,0	31,0	36,7	44,0	3,8	***

Note
*** only for 1SC hoses acc. to 1SC DIN EN 857

Dietzel Hydraulik GmbH
Leedenstraße 10
04626 Löbichau

Tel.: +49 (36602) 140-140

E-Mail: vertrieb@dietzel-hydraulik.de

Pressure fittings

Kombi SKIVE (100)

Updated at:
24.05.2022

Connection
Combination press holder SKIVE for dH1000

Application
dH1000 SN / TE (NO-SKIVE) flexible tubes

Material
Steel

Surface protection
Zinc-electroplated

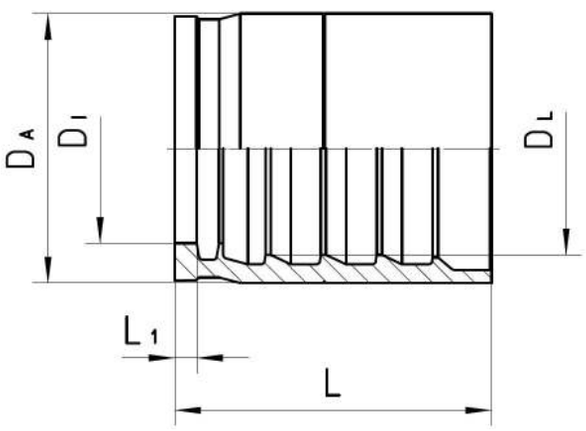

Order no.	DN in mm	DA in mm	DI in mm	DL in mm	L in mm	L1 in mm
100-04	06	19,0	11,5	13,5	29,0	2,5
100-05	08	21,0	13,3	15,5	29,0	2,4
100-06	10	23,0	14,5	17,5	31,5	2,5
100-08	12	27,0	18,8	21,0	34,0	2,6
100-10	16	32,0	22,0	24,5	37,0	2,6
100-12	19	36,0	25,4	28,5	42,5	2,95
100-16	25	44,0	31,3	36,0	49,0	3,7

Dietzel Hydraulik GmbH
Leedenstraße 10
04626 Löbichau

Tel.: +49 (36602) 140-140

E-Mail: vertrieb@dietzel-hydraulik.de

Pressure fittings

SKIVE 1SN (110)

Updated at:
24.05.2022

Connection
SKIVE 1SN press holder for dH1000

Application
dH1000 1SN flexible tubes

Material
Steel

Surface protection
Zinc-electroplated

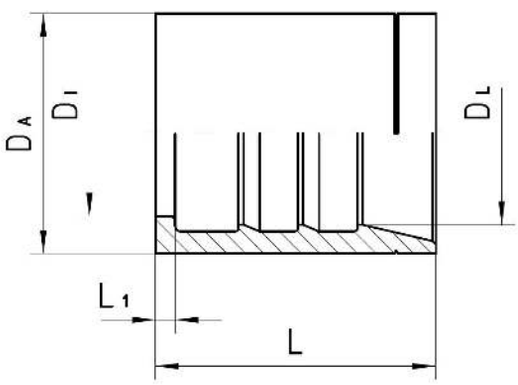

Order no.	DN in mm	DA in mm	DI in mm	DL in mm	L in mm	L1 in mm
110-20	31	50,0	37,6	42,4	59,0	3,8
110-24	38	58,0	45,0	49,0	63,0	3,8
110-32	51	72,4	57,2	61,3	78,5	3,8

Dietzel Hydraulik GmbH
Leedenstraße 10
04626 Löbichau

Tel.: +49 (36602) 140-140

E-Mail: vertrieb@dietzel-hydraulik.de

Pressure fittings

SKIVE 2SN (120)

Updated at:
24.05.2022

Connection
SKIVE 1SN press holder for dH1000

Application
dH1000 2SN flexible tubes

Material
Steel

Surface protection
Zinc-electroplated

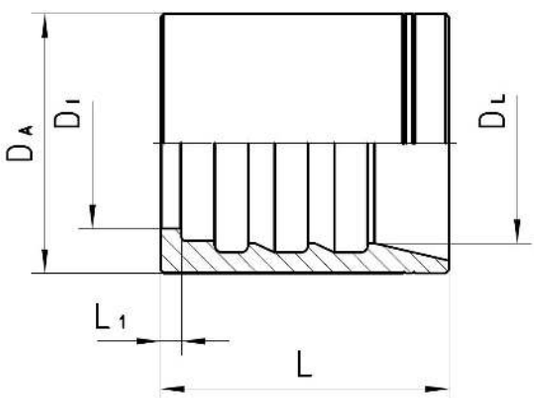

Order no.	DN in mm	DA in mm	DI in mm	DL in mm	L in mm	L1 in mm
120-20	31	55,0	37,6	45,2	59,0	3,8
120-24	38	62,0	44,2	51,8	62,8	3,8
120-32	51	75,0	57,2	64,5	78,5	3,8
120-36	60	85,0	69,4	75,0	75,0	4,5
120-48	76	105,0	82,0	90,0	80,0	4,7

Dietzel Hydraulik GmbH
Leedenstraße 10
04626 Löbichau

Tel.: +49 (36602) 140-140

E-Mail: vertrieb@dietzel-hydraulik.de

Pressure fittings

Kombi PTFE (FR272)

Updated at:
24.05.2022

Connection
Combination press holder PTFE, smooth and corrugated for dH1000

Application
dH1000 R115 / R272 flexible tubes

Material
Steel

Surface protection
Zinc-electroplated

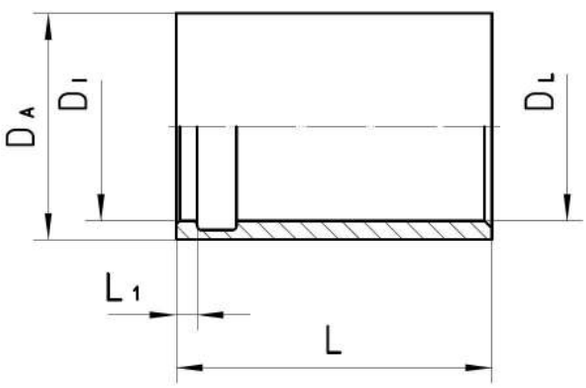

Order no.	DN in mm	DA in mm	DI in mm	DL in mm	L in mm	L1 in mm
FR272-04	06	15,0	11,4	11,3	28,0	2,0
FR272-05	08	19,0	14,2	15,4	32,0	2,0
FR272-06	10	19,0	14,2	15,4	32,0	2,0
FR272-08	12	25,0	18,5	20,5	32,0	2,0
FR272-10	16	30,0	23,0	25,0	36,0	2,3
FR272-12	19	33,0	26,0	28,0	38,5	2,0
FR272-16	25	42,0	35,0	37,0	47,0	2,5
FR272-20	31	47,5	42,0	43,0	54,0	3,0
FR272-24	40	55,0	47,5	49,8	65,0	3,0
FR272-32	51	68,5	62,0	63,0	75,0	2,5

Dietzel Hydraulik GmbH
Leedenstraße 10
04626 Löbichau

Tel.: +49 (36602) 140-140

E-Mail: vertrieb@dietzel-hydraulik.de

Pressure fittings

DKOL straight

Updated at:
24.05.2022

Connection
Sealing head 24° outside cone O-ring sealing with metric nut L series

Standard
ISO 8434-1

Application
3SPC / 4SP hoses / 4SH19 / 4SH25

Material
Steel

Surface protection
Zinc-electroplated

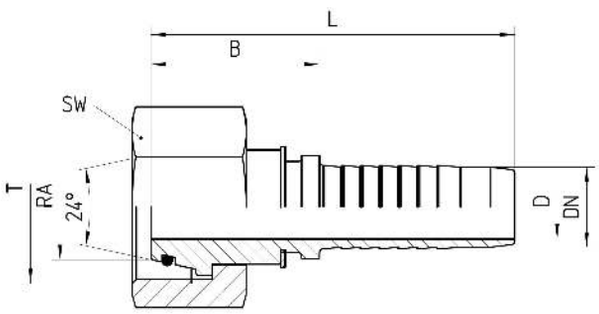

Order no.	DN in mm	RA	T	SW in mm	min. D in mm	B±3 in mm	L±3 in mm
4.051-03-04	06	6L	M 12x1.5	14	2,8	26	60
4.051-04-04	06	8L	M 14x1.5	17	4,0	28	62
4.051-05-04	06	10L	M 16x1.5	19	4,0	30	64
4.051-05-06	10	10L	M 16x1.5	19	5,5	30	64
4.051-06-06	10	12L	M 18x1.5	22	7,0	25	59
4.051-08-06	10	15L	M 22x1.5	27	7,0	29	63
4.051-06-08	12	12L	M 18x1.5	22	7,5	34	72
4.051-08-08	12	15L	M 22x1.5	27	9,0	26	64

Dietzel Hydraulik GmbH
Leedenstraße 10
04626 Löbichau

Tel.: +49 (36602) 140-140

E-Mail: vertrieb@dietzel-hydraulik.de

Order no.	DN in mm	RA	T	SW in mm	min. D in mm	B±3 in mm	L±3 in mm
4.051-10-08	12	18L	M 26x1.5	32	9,0	34	72
4.051-08-10	16	15L	M 22x1.5	27	10,0	33	75
4.051-10-10	16	18L	M 26x1.5	32	12,0	31	73
4.051-12-10	16	22L	M 30x2.0	36	12,0	32	74
4.051-10-12	19	18L	M 26x1.5	32	12,0	34	80
4.051-12-12	19	22L	M 30x2.0	36	14,8	37	83
4.051-16-12	19	28L	M 36x2.0	41	14,8	37	83
4.051-12-16	25	22L	M 30x2.0	36	14,0	42	97
4.051-16-16	25	28L	M 36x2.0	41	19,9	41	96
4.051-20-16	25	35L	M 45x2.0	50	19,9	43	98

Dietzel Hydraulik GmbH
Leedenstraße 10
04626 Löbichau

Tel.: +49 (36602) 140-140

E-Mail: vertrieb@dietzel-hydraulik.de

Pressure fittings

DKOL 45°

Updated at:
24.05.2022

Connection
Sealing head 24° outside cone O-ring sealing with metric nut L series

Standard
ISO 8434-1

Application
3SPC / 4SP hoses / 4SH19 / 4SH25

Material
Steel

Surface protection
Zinc-electroplated

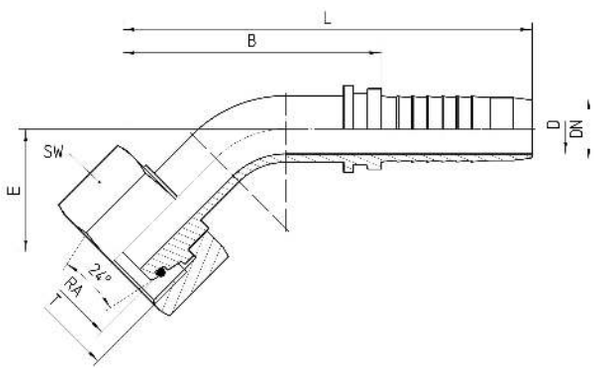

Order no.	DN in mm	RA	T	SW in mm	min. D in mm	E±3 in mm	B±3 in mm	L±3 in mm
4.055-03-04	06	6L	M 12x1.5	14	2,8	17	37	71
4.055-04-04	06	8L	M 14x1.5	17	4,0	17	37	71
4.055-05-04	06	10L	M 16x1.5	19	4,0	18	38	72
4.055-05-06	10	10L	M 16x1.5	19	5,5	21	42	76
4.055-06-06	10	12L	M 18x1.5	22	7,0	20	42	76
4.055-08-06	10	15L	M 22x1.5	27	7,0	20	41	75
4.055-06-08	12	12L	M 18x1.5	22	7,5	24	52	90
4.055-08-08	12	15L	M 22x1.5	27	9,0	24	53	91

Dietzel Hydraulik GmbH
Leedenstraße 10
04626 Löbichau

Tel.: +49 (36602) 140-140

E-Mail: vertrieb@dietzel-hydraulik.de

Order no.	DN in mm	RA	T	SW in mm	min. D in mm	E±3 in mm	B±3 in mm	L±3 in mm
4.055-10-08	12	18L	M 26x1.5	32	9,0	25	51	89
4.055-08-10	16	15L	M 22x1.5	27	8,8	30	67	109
4.055-10-10	16	18L	M 26x1.5	32	12,0	27	66	108
4.055-12-10	16	22L	M 30x2.0	36	12,0	29	66	108
4.055-10-12	19	18L	M 26x1.5	32	11,5	33	74	120
4.055-12-12	19	22L	M 30x2.0	36	14,8	32	76	122
4.055-16-12	19	28L	M 36x2.0	41	14,8	32	74	120
4.055-12-16	25	22L	M 30x2.0	36	13,8	36	84	139
4.055-16-16	25	28L	M 36x2.0	41	19,9	37	86	141
4.055-20-16	25	35L	M 45x2.0	50	19,9	39	86	141

Dietzel Hydraulik GmbH
Leedenstraße 10
04626 Löbichau

Tel.: +49 (36602) 140-140

E-Mail: vertrieb@dietzel-hydraulik.de

Pressure fittings

DKOL 90°

Updated at:
24.05.2022

Connection
Sealing head 24° outside cone O-ring sealing with metric nut L series

Standard
ISO 8434-1

Application
3SPC / 4SP hoses / 4SH19 / 4SH25

Material
Steel

Surface protection
Zinc-electroplated

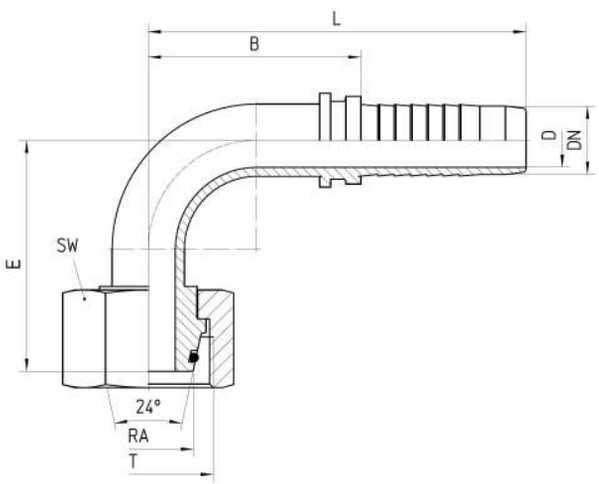

Order no.	DN in mm	RA	T	SW in mm	min. D in mm	E±3 in mm	B±3 in mm	L±3 in mm
4.059-03-04	06	6L	M 12x1.5	14	2,8	29	27	61
4.059-04-04	06	8L	M14 x1.5	17	4,0	31	27	61
4.059-05-04	06	10L	M 16x1.5	19	4,0	33	27	61
4.059-05-06	10	10L	M 16x1.5	19	5,5	35	31	65
4.059-06-06	10	12L	M 18x1.5	22	7,0	35	31	65
4.059-08-06	10	15L	M 22x1.5	27	7,0	33	31	65
4.059-06-08	12	12L	M 18x1.5	22	7,5	46	42	80

Dietzel Hydraulik GmbH
Leedenstraße 10
04626 Löbichau

Tel.: +49 (36602) 140-140

E-Mail: vertrieb@dietzel-hydraulik.de

Order no.	DN in mm	RA	T	SW in mm	min. D in mm	E±3 in mm	B±3 in mm	L±3 in mm
4.059-08-08	12	15L	M 22x1.5	27	9,0	44	42	80
4.059-10-08	12	18L	M 26x1.5	32	9,0	46	42	80
4.059-08-10	16	15L	M 22x1.5	27	8,8	56	53	95
4.059-10-10	16	18L	M 26x1.5	32	12,0	55	53	95
4.059-12-10	16	22L	M 30x2.0	36	12,0	56	51	93
4.059-10-12	19	18L	M 26x1.5	32	11,5	61	60	106
4.059-12-12	19	22L	M 30x2.0	36	14,8	64	60	106
4.059-16-12	19	28L	M 36x2.0	41	14,8	62	59	105
4.059-12-16	25	22L	M 30x2.0	36	13,8	74	65	120
4.059-16-16	25	28L	M 36x2.0	41	19,9	75	63	118
4.059-20-16	25	35L	M 45x2.0	50	19,9	74	65	120

Dietzel Hydraulik GmbH
Leedenstraße 10
04626 Löbichau

Tel.: +49 (36602) 140-140

E-Mail: vertrieb@dietzel-hydraulik.de

Pressure fittings

DKOS straight

Updated at:
24.05.2022

Connection
Sealing head 24° outside cone O-ring sealing with metric nut S series

Standard
ISO 8434-1

Application
3SPC / 4SP hoses / 4SH19 / 4SH25

Material
Steel

Surface protection
Zinc-electroplated

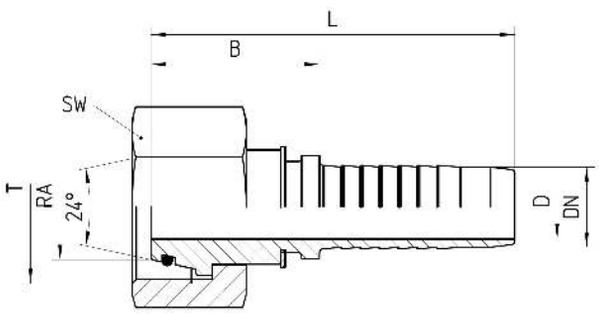

Order no.	DN in mm	RA	T	SW in mm	min. D in mm	B±3 in mm	L±3 in mm	Note
4.081-03-04	06	8S	M 16x1.5	19	4,0	29	62	
4.081-04-04	06	10S	M 18x1.5	22	4,0	30	64	
4.081-05-04	06	12S	M 20x1.5	24	4,0	29	63	
4.081-05-06	10	12S	M 20x1.5	24	7,0	29	63	
4.081-06-06	10	14S	M 22x1.5	27	7,0	30	65	
4.081-08-06	10	16S	M 24x1.5	30	7,0	30	64	
4.081-06-08	12	14S	M 22x1.5	27	7,0	35	73	
4.081-08-08	12	16S	M 24x1.5	30	9,0	30	68	

Dietzel Hydraulik GmbH
Leedenstraße 10
04626 Löbichau

Tel.: +49 (36602) 140-140

E-Mail: vertrieb@dietzel-hydraulik.de

Order no.	DN in mm	RA	T	SW in mm	min. D in mm	B±3 in mm	L±3 in mm	Note
4.081-10-08	12	20S	M 30x2.0	36	9,0	36	74	
4.081-08-10	16	16S	M 24x1.5	30	10,0	34	76	
4.081-10-10	16	20S	M 30x2.0	36	12,0	36	78	
4.081-12-10/ SW41	16	25S	M 36x2.0	41	12,0	36	78	a
4.081-12-10/ SW46	16	25S	M 36x2.0	46	12,0	36	78	
4.081-10-12	19	20S	M 30x2.0	36	13,0	37	83	
4.081-12-12/ SW41	19	25S	M 36x2.0	41	15,0	40	86	a
4.081-12-12/ SW46	19	25S	M 36x2.0	46	15,0	40	86	
4.081-16-12	19	30S	M 42x2.0	50	14,8	39	85	
4.081-12-16/ SW46	25	25S	M 36x2.0	46	15,0	43	98	
4.081-16-16	25	30S	M 42x2.0	50	21,0	45	101	
4.081-20-16	25	38S	M 52x2.0	60	21,1	44	99	

Note
a) not according to ISO 8434-1

Dietzel Hydraulik GmbH
Leedenstraße 10
04626 Löbichau

Tel.: +49 (36602) 140-140

E-Mail: vertrieb@dietzel-hydraulik.de

Pressure fittings

DKOS 45°

Updated at:
24.05.2022

Connection
Sealing head 24° outside cone O-ring sealing with metric nut S series

Standard
ISO 8434-1

Application
3SPC / 4SP hoses / 4SH19 / 4SH25

Material
Steel

Surface protection
Zinc-electroplated

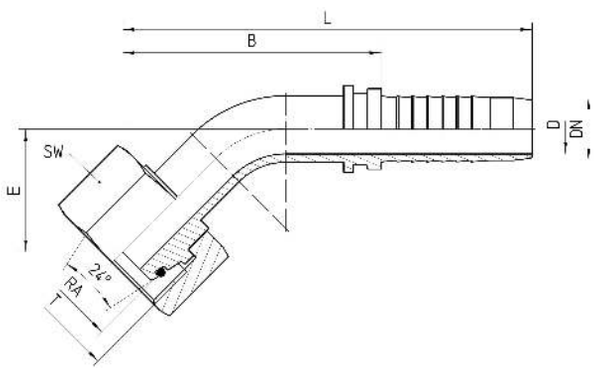

Order no.	DN in mm	RA	T	SW in mm	min. D in mm	E±3 in mm	B±3 in mm	L±3 in mm	Note
4.085-03-04	06	8S	M 16x1.5	19	4,0	18	38	72	
4.085-04-04	06	10S	M 18x1.5	22	4,0	19	39	73	
4.085-05-04	06	12S	M 20x1.5	24	4,0	18	38	72	
4.085-05-06	10	12S	M 20x1.5	24	7,0	20	41	75	
4.085-06-06	10	14S	M 22x1.5	27	7,0	21	42	76	
4.085-08-06	10	16S	M 24x1.5	30	7,0	20	41	75	
4.085-06-08	12	14S	M 22x1.5	27	7,0	26	53	91	
4.085-08-08	12	16S	M 24x1.5	30	9,0	25	53	91	

Dietzel Hydraulik GmbH
Leedenstraße 10
04626 Löbichau

Tel.: +49 (36602) 140-140

E-Mail: vertrieb@dietzel-hydraulik.de

Order no.	DN in mm	RA	T	SW in mm	min. D in mm	E±3 in mm	B±3 in mm	L±3 in mm	Note
4.085-10-08	12	20S	M 30x2.0	36	9,0	27	55	93	
4.085-08-10	16	16S	M 24x1.5	30	10,0	32	68	110	
4.085-10-10	16	20S	M 30x2.0	36	12,0	29	70	112	
4.085-12-10/ SW41	16	25S	M 36x2.0	41	12,0	32	69	111	a
4.085-12-10/ SW46	16	25S	M 36x2.0	46	12,0	32	69	111	
4.085-10-12	19	20S	M 30x2.0	36	13,0	34	76	122	
4.085-12-12/ SW41	19	25S	M 36x2.0	41	14,8	36	77	123	a
4.085-12-12/ SW46	19	25S	M 36x2.0	46	14,8	36	77	123	
4.085-16-12	19	30S	M 42x2.0	50	14,8	35	72	118	
4.085-12-16/ SW46	25	25S	M 36x2.0	46	13,5	40	87	142	
4.085-16-16	25	30S	M 42x2.0	50	19,9	42	89	144	
4.085-20-16	25	38S	M 52x2.0	60	19,9	36	84	139	

Note
a) not according to ISO 8434-1

Dietzel Hydraulik GmbH
Leedenstraße 10
04626 Löbichau

Tel.: +49 (36602) 140-140

E-Mail: vertrieb@dietzel-hydraulik.de

Pressure fittings
DKOS 90°

Updated at:
24.05.2022

Connection
Sealing head 24° outside cone O-ring sealing with metric nut S series

Standard
ISO 8434-1

Application
3SPC / 4SP hoses / 4SH19 / 4SH25

Material
Steel

Surface protection
Zinc-electroplated

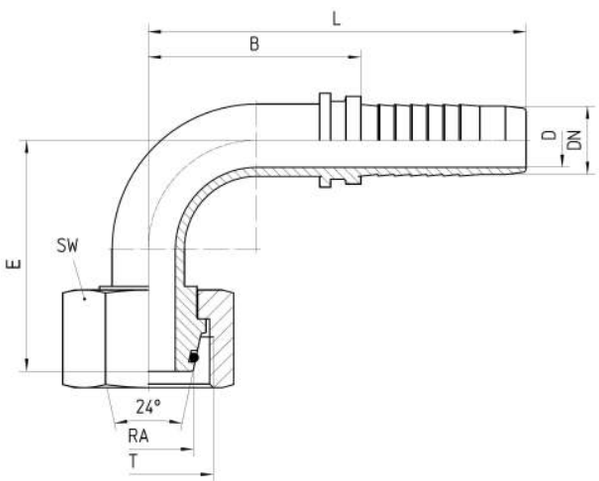

Order no.	DN in mm	RA	T	SW in mm	min. D in mm	E±3 in mm	B±3 in mm	L±3 in mm	Note
4.089-03-04	06	8S	M 16x1.5	19	4,0	33	27	61	
4.089-04-04	06	10S	M 18x1.5	22	4,0	33	27	61	
4.089-05-04	06	12S	M 20x1.5	24	4,0	32	27	61	
4.089-05-06	10	12S	M 20x1.5	24	7,0	35	31	65	
4.089-06-06	10	14S	M 22x1.5	27	7,0	36	31	65	
4.089-08-06	10	16S	M 24x1.5	30	7,0	36	31	65	
4.089-06-08	12	14S	M 22x1.5	27	7,0	45	43	81	

Dietzel Hydraulik GmbH
Leedenstraße 10
04626 Löbichau

Tel.: +49 (36602) 140-140

E-Mail: vertrieb@dietzel-hydraulik.de

Order no.	DN in mm	RA	T	SW in mm	min. D in mm	E±3 in mm	B±3 in mm	L±3 in mm	Note
4.089-08-08	12	16S	M 24x1.5	30	9,0	46	42	80	
4.089-10-08	12	20S	M 30x2.0	36	9,0	47	43	81	
4.089-08-10	16	16S	M 24x1.5	30	10,0	56	52	94	
4.089-10-10	16	20S	M 30x2.0	36	12,0	57	53	95	
4.089-12-10/ SW41	16	25S	M 36x2.0	41	12,0	59	51	93	a
4.089-12-10/ SW46	16	25S	M 36x2.0	46	12,0	59	51	93	
4.089-10-12	19	20S	M 30x2.0	36	13,0	65	58	104	
4.089-12-12/ SW41	19	25S	M 36x2.0	41	14,8	65	60	106	a
4.089-12-12/ SW46	19	25S	M 36x2.0	46	14,8	65	60	106	
4.089-16-12	19	30S	M 42x2.0	50	14,8	65	60	106	
4.089-12-16/ SW46	25	25S	M 36x2.0	46	13,5	78	65	120	
4.089-16-16	25	30S	M 42x2.0	50	19,9	76	67	122	
4.089-20-16	25	38S	M 52x2.0	60	19,9	76	65	120	

Note
a) not according to ISO 8434-1

Dietzel Hydraulik GmbH
Leedenstraße 10
04626 Löbichau

Tel.: +49 (36602) 140-140

E-Mail: vertrieb@dietzel-hydraulik.de

Pressure fittings

SFL straight

Updated at:
24.05.2022

Connection
SAE-flange 3000PSI (L series)

Standard
ISO 6162-1

Application
3SPC / 4SP hoses / 4SH19 / 4SH25

Material
Steel

Surface protection
Zinc-electroplated

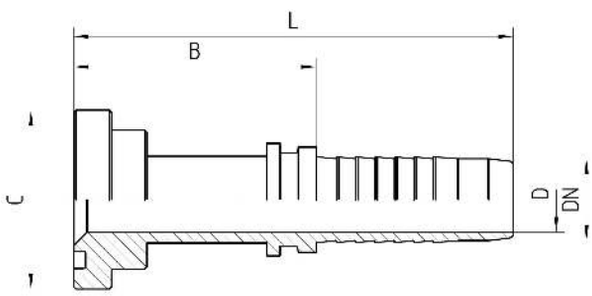

Order no.	DN in mm	flange	C in mm	min. D in mm	B±3 in mm	L±3 in mm
4.420-08-08	12	1/2	30,2	9,0	51	89
4.420-12-08	12	3/4	38,1	9,0	52	90
4.420-08-10	16	1/2	30,2	12,0	52	94
4.420-12-10	16	3/4	38,1	12,0	49	91
4.420-08-12	19	1/2	30,2	13,5	55	101
4.420-12-12	19	3/4	38,1	14,8	57	103
4.420-16-12	19	1	44,5	14,8	57	103
4.420-12-16	25	3/4	38,1	19,9	55	110
4.420-16-16	25	1	44,5	19,9	56	111

Dietzel Hydraulik GmbH
Leedenstraße 10
04626 Löbichau

Tel.: +49 (36602) 140-140

E-Mail: vertrieb@dietzel-hydraulik.de

Order no.	DN in mm	flange	C in mm	min. D in mm	B±3 in mm	L±3 in mm
4.420-20-16	25	1 1/4	50,8	19,9	56	111

Dietzel Hydraulik GmbH
Leedenstraße 10
04626 Löbichau

Tel.: +49 (36602) 140-140

E-Mail: vertrieb@dietzel-hydraulik.de

Pressure fittings

SFL 45°

Updated at:
24.05.2022

Connection
SAE-flange 3000PSI (L series)

Standard
ISO 6162-1

Application
3SPC / 4SP hoses / 4SH19 / 4SH25

Material
Steel

Surface protection
Zinc-electroplated

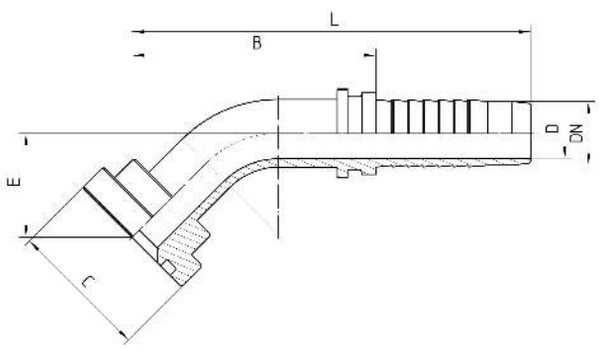

Order no.	DN in mm	flange in inch	C in mm	min. D in mm	E±3 in mm	B±3 in mm	L±3 in mm
4.450-08-08	12	1/2	30,2	9,0	23	44	89
4.450-12-08	12	3/4	38,1	9,0	23	45	87
4.450-08-10	16	1/2	30,2	12,0	27	66	108
4.450-12-10	16	3/4	38,1	12,0	28	66	108
4.450-08-12	19	1/2	30,2	13,5	29	74	120
4.450-12-12	19	3/4	38,1	14,8	33	74	120
4.450-16-12	19	1	44,5	14,8	31	73	119
4.450-12-16	25	3/4	38,1	19,9	32	76	131

Dietzel Hydraulik GmbH
Leedenstraße 10
04626 Löbichau

Tel.: +49 (36602) 140-140

E-Mail: vertrieb@dietzel-hydraulik.de

Order no.	DN in mm	flange in inch	C in mm	min. D in mm	E±3 in mm	B±3 in mm	L±3 in mm
4.450-16-16	25	1	44,5	19,9	32	82	137
4.450-20-16	25	1 1/4	50,8	19,9	31	72	127

Dietzel Hydraulik GmbH
Leedenstraße 10
04626 Löbichau

Tel.: +49 (36602) 140-140

E-Mail: vertrieb@dietzel-hydraulik.de

Pressure fittings

SFL 90°

Updated at:
24.05.2022

Connection
SAE-flange 3000PSI (L series)

Standard
ISO 6162-1

Application
3SPC / 4SP hoses / 4SH19 / 4SH25

Material
Steel

Surface protection
Zinc-electroplated

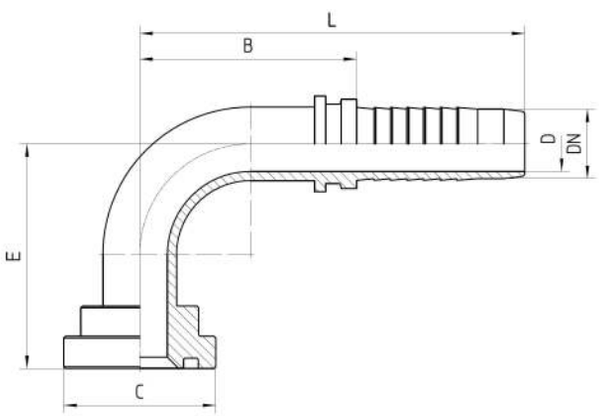

Order no.	DN in mm	flange in inch	C in mm	min. D in mm	E±3 in mm	B±3 in mm	L±3 in mm
4.470-08-08	12	1/2	30,2	9,0	42	42	80
4.470-12-08	12	3/4	38,1	9,0	41	42	80
4.470-08-10	16	1/2	30,2	12,0	54	52	94
4.470-12-10	16	3/4	38,1	12,0	54	52	94
4.470-08-12	19	1/2	30,2	13,5	60	60	106
4.470-12-12	19	3/4	38,1	14,8	58	60	106
4.470-16-12	19	1	44,5	14,8	60	61	107
4.470-12-16	25	3/4	38,1	19,9	69	65	120

Dietzel Hydraulik GmbH
Leedenstraße 10
04626 Löbichau

Tel.: +49 (36602) 140-140

E-Mail: vertrieb@dietzel-hydraulik.de

Order no.	DN in mm	flange in inch	C in mm	min. D in mm	E±3 in mm	B±3 in mm	L±3 in mm
4.470-16-16	25	1	44,5	19,9	69	65	120
4.470-20-16	25	1 1/4	50,8	19,9	69	65	120

Dietzel Hydraulik GmbH
Leedenstraße 10
04626 Löbichau

Tel.: +49 (36602) 140-140

E-Mail: vertrieb@dietzel-hydraulik.de

Pressure fittings
SFS straight

Updated at:
24.05.2022

Connection
SAE flange 6000PSI (S series)

Standard
ISO 6162-2

Application
3SPC / 4SP hoses / 4SH19 / 4SH25

Material
Steel

Surface protection
Zinc-electroplated

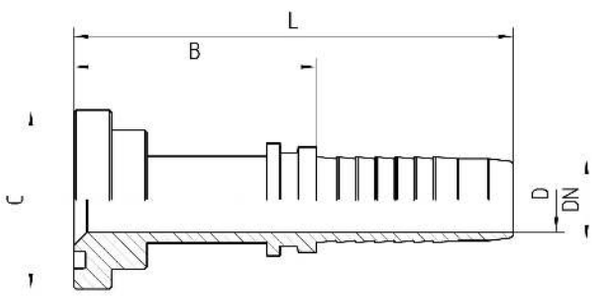

Order no.	DN in mm	flange in inch	C in mm	min. D in mm	B±3 in mm	L±3 in mm
4.421-08-08	12	1/2	31,7	9,0	53	91
4.421-12-08	12	3/4	41,3	9,0	53	91
4.421-08-10	16	1/2	31,7	12,0	53	95
4.421-12-10	16	3/4	41,3	12,0	50	92
4.421-08-12	19	1/2	31,7	14,0	56	102
4.421-12-12	19	3/4	41,3	14,8	58	104
4.421-16-12	19	1	47,6	14,8	58	104
4.421-12-16	25	3/4	41,3	19,9	57	112
4.421-16-16	25	1	47,6	19,9	57	112

Dietzel Hydraulik GmbH
Leedenstraße 10
04626 Löbichau

Tel.: +49 (36602) 140-140

E-Mail: vertrieb@dietzel-hydraulik.de

Order no.	DN in mm	flange in inch	C in mm	min. D in mm	B±3 in mm	L±3 in mm
4.421-20-16	25	1 1/4	54,0	19,9	58	113

Dietzel Hydraulik GmbH
Leedenstraße 10
04626 Löbichau

Tel.: +49 (36602) 140-140

E-Mail: vertrieb@dietzel-hydraulik.de

Pressure fittings

SFS 45°

Updated at:
24.05.2022

Connection
SAE flange 6000PSI (S series)

Standard
ISO 6162-2

Application
3SPC / 4SP hoses / 4SH19 / 4SH25

Material
Steel

Surface protection
Zinc-electroplated

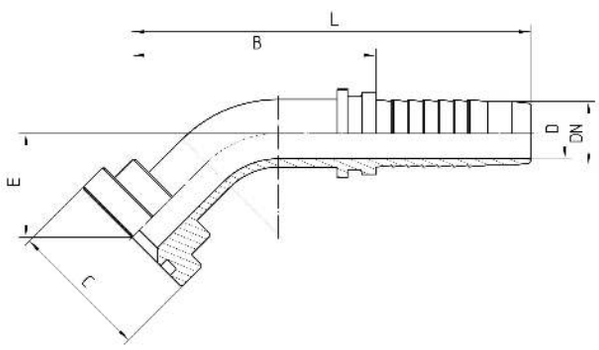

Order no.	DN in mm	flange in inch	C in mm	min. D in mm	E±3 in mm	B±3 in mm	L±3 in mm
4.451-08-08	12	1/2	31,7	9,0	22	50	88
4.451-12-08	12	3/4	41,3	9,0	22	50	88
4.451-08-10	16	1/2	31,7	12,0	28	67	109
4.451-12-10	16	3/4	41,3	12,0	29	64	106
4.451-08-12	19	1/2	31,7	14,0	31	74	120
4.451-12-12	19	3/4	41,3	14,8	32	73	119
4.451-16-12	19	1	47,6	14,8	32	73	119
4.451-12-16	25	3/4	41,3	19,9	36	87	142

Dietzel Hydraulik GmbH
Leedenstraße 10
04626 Löbichau

Tel.: +49 (36602) 140-140

E-Mail: vertrieb@dietzel-hydraulik.de

Order no.	DN in mm	flange in inch	C in mm	min. D in mm	E±3 in mm	B±3 in mm	L±3 in mm
4.451-16-16	25	1	47,6	19,9	37	84	139
4.451-20-16	25	1 1/4	54,0	19,9	34	85	140

Dietzel Hydraulik GmbH
Leedenstraße 10
04626 Löbichau

Tel.: +49 (36602) 140-140

E-Mail: vertrieb@dietzel-hydraulik.de

Pressure fittings

SFS 90°

Updated at:
24.05.2022

Connection
SAE flange 6000PSI (S series)

Standard
ISO 6162-2

Application
3SPC / 4SP hoses / 4SH19 / 4SH25

Material
Steel

Surface protection
Zinc-electroplated

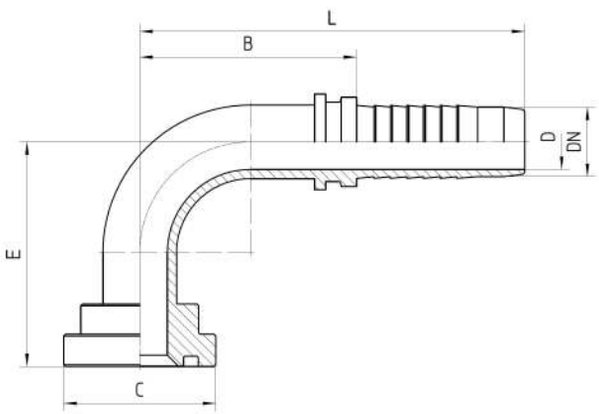

Order no.	DN in mm	flange in inch	C in mm	min. D in mm	E±3 in mm	B±3 in mm	L±3 in mm
4.471-08-08	12	1/2	31,7	9,0	44	39	77
4.471-12-08	12	3/4	41,3	9,0	42	39	79
4.471-08-10	16	1/2	31,7	12,0	55	52	94
4.471-12-10	16	3/4	41,3	12,0	55	52	94
4.471-08-12	19	1/2	31,7	14,0	61	60	106
4.471-12-12	19	3/4	41,3	14,8	60	60	106
4.471-16-12	19	1	47,6	14,8	60	60	106
4.471-12-16	25	3/4	41,3	19,9	72	65	120

Dietzel Hydraulik GmbH
Leedenstraße 10
04626 Löbichau

Tel.: +49 (36602) 140-140

E-Mail: vertrieb@dietzel-hydraulik.de

Order no.	DN in mm	flange in inch	C in mm	min. D in mm	E±3 in mm	B±3 in mm	L±3 in mm
4.471-16-16	25	1	47,6	19,9	72	65	120
4.471-20-16	25	1 1/4	54,0	19,9	71	65	120

Dietzel Hydraulik GmbH
Leedenstraße 10
04626 Löbichau

Tel.: +49 (36602) 140-140

E-Mail: vertrieb@dietzel-hydraulik.de

Pressure fittings

4SP SKIVE (440)

Updated at:
24.05.2022

Application
SKIVE 4SP press holder for dH4000 4SP / 3 SPC hoses / 4SH19 / 4SH25

Material
Steel

Surface protection
Zinc-electroplated

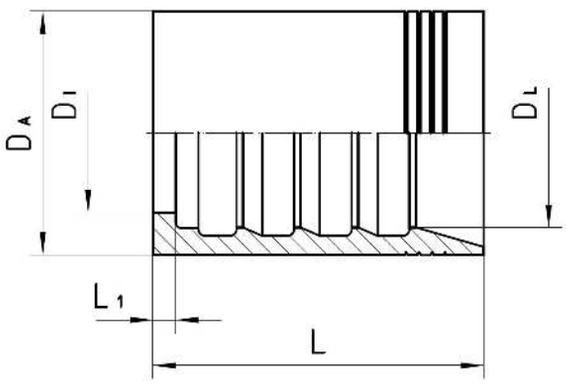

Order no.	DN in mm	DA in mm	DI in mm	DL in mm	L in mm	L1 in mm
440-04	06	21,7	11,5	15,5	37,0	3,0
440-06	10	25,5	14,6	18,1	38,9	3,0
440-08	12	28,5	17,5	21,1	41,2	3,0
440-10	16	33,0	21,0	25,0	44,0	3,0
440-12	19	37,5	24,5	29,0	51,1	3,5
440-16	25	46,0	31,0	36,3	61,7	4,2

Dietzel Hydraulik GmbH
Leedenstraße 10
04626 Löbichau

Tel.: +49 (36602) 140-140

E-Mail: vertrieb@dietzel-hydraulik.de

Pressure fittings

DKOS straight

Updated at:
11.01.2023

Connection
Sealing head 24° outside cone O-ring sealing with metric nut S series

Standard
ISO 8434-1

Application
4SH flexible tubes

Material
Steel

Surface protection
Zinc-electroplated

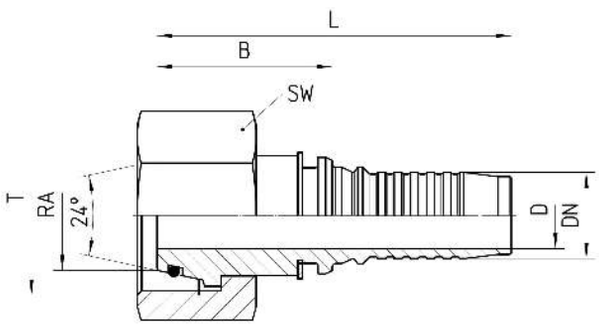

Order no.	DN in mm	RA	T	SW in mm	min. D in mm	B±3 in mm	L±3 in mm	Note
5.081-10-12	19	20S	M 30x2.0	36	13,0	38	79	
5.081-12-12/ SW41	19	25S	M 36x2.0	41	15,0	39	80	a
5.081-12-12/ SW46	19	25S	M 36x2.0	46	15,0	39	80	
5.081-16-12	19	30S	M 42x2.0	50	14,8	41	81	
5.081-12-16/ SW46	25	25S	M 36x2.0	46	15,0	42	92	b
5.081-16-16	25	30S	M 42x2.0	50	20,0	40	94	b
5.081-20-16	25	38S	M 52x2.0	60	20,0	37	89	b

Dietzel Hydraulik GmbH
Leedenstraße 10
04626 Löbichau

Tel.: +49 (36602) 140-140

E-Mail: vertrieb@dietzel-hydraulik.de

Order no.	DN in mm	RA	T	SW in mm	min. D in mm	B±3 in mm	L±3 in mm	Note
5.081-16-20	31	30S	M 42x2.0	50	20,0	36	105	
5.081-20-20	31	38S	M 52x2.0	60	26,5	41	110	
5.081-20-24	38	38S	M 52x2.0	60	25,0	39	108	

Note
a) not according to ISO 8434-1, b) changed outline to improve the safety, therefore measurements differ from standard systems

Accessories
O-ring DKOL/DKOS

Dietzel Hydraulik GmbH
Leedenstraße 10
04626 Löbichau

Tel.: +49 (36602) 140-140

E-Mail: vertrieb@dietzel-hydraulik.de

Pressure fittings

DKOS 45°

Updated at:
24.05.2022

Connection
Sealing head 24° outside cone O-ring sealing with metric nut S series

Standard
ISO 8434-1

Application
4SH flexible tubes

Material
Steel

Surface protection
Zinc-electroplated

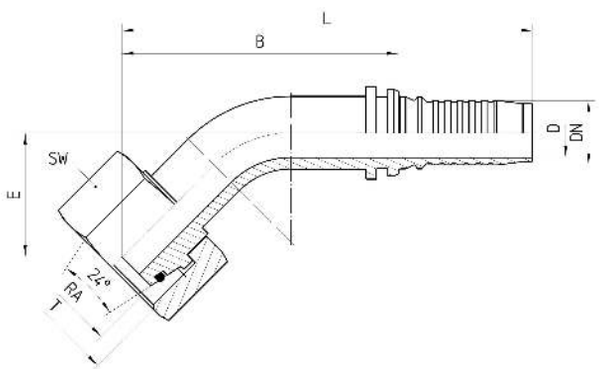

Order no.	DN in mm	RA	T	SW in mm	min. D in mm	E±3 in mm	B±3 in mm	L±3 in mm	Note
5.085-10-12	19	20S	M 30x2,0	36	13,0	37	81	122	
5.085-12-12/ SW46	19	25S	M 36x2,0	46	14,8	36	84	125	
5.085-16-12	19	30S	M 42x2,0	50	14,8	34	77	118	
5.085-12-16/ SW46	25	25S	M 36x2,0	46	15,0	40	97	149	*
5.085-16-16	25	30S	M 42x2,0	50	20,0	41	96	148	*
5.085-20-16	25	38S	M 52x2,0	60	20,0	40	97	149	*

Dietzel Hydraulik GmbH
Leedenstraße 10
04626 Löbichau

Tel.: +49 (36602) 140-140

E-Mail: vertrieb@dietzel-hydraulik.de

Order no.	DN in mm	RA	T	SW in mm	min. D in mm	E±3 in mm	B±3 in mm	L±3 in mm	Note
5.085-16-20	31	30S	M 42x2,0	50	20,0	58	126	195	
5.085-20-20	31	38S	M 52x2,0	60	25,0	58	126	195	
5.085-20-24	38	38S	M 52x2,0	60	25,0	55	126	195	

Note
* changed outline to improve the safety, therefore measurements differ from standard systems

Accessories
O-ring DKOL/DKOS

Dietzel Hydraulik GmbH
Leedenstraße 10
04626 Löbichau

Tel.: +49 (36602) 140-140

E-Mail: vertrieb@dietzel-hydraulik.de

Pressure fittings

DKOS 90°

Updated at:
11.01.2023

Connection
Sealing head 24° outside cone O-ring sealing with metric nut S series

Standard
ISO 8434-1

Application
4SH flexible tubes

Material
Steel

Surface protection
Zinc-electroplated

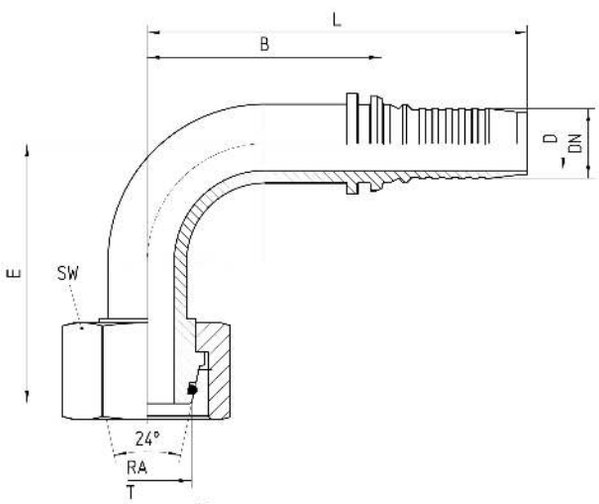

Order no.	DN in mm	RA	T	SW in mm	min. D in mm	E±3 in mm	B±3 in mm	L±3 in mm	Note
5.089-10-12	19	20S	M 30x2,0	36	13,0	68	60	101	
5.089-12-12/ SW46	19	25S	M 36x2,0	46	14,8	70	60	101	
5.089-16-12	19	30S	M 42x2,0	50	14,8	67	60	101	
5.089-12-16/ SW46	25	25S	M 36x2,0	46	15,0	76	81	133	*
5.089-16-16	25	30S	M 42x2,0	50	20,0	80	82	131	*
5.089-20-16	25	38S	M 52x2,0	60	20,0	75	81	133	*

Dietzel Hydraulik GmbH
Leedenstraße 10
04626 Löbichau

Tel.: +49 (36602) 140-140

E-Mail: vertrieb@dietzel-hydraulik.de

Order no.	DN in mm	RA	T	SW in mm	min. D in mm	E±3 in mm	B±3 in mm	L±3 in mm	Note
5.089-16-20	31	30S	M 42x2,0	50	20,0	108	102	171	
5.089-20-20	31	38S	M 52x2,0	60	25,0	108	102	171	
5.089-20-24	38	38S	M 52x2,0	60	25,0	108	121	190	

Note
* changed outline to improve the safety, therefore measurements differ from standard systems

Accessories
O-ring DKOL/DKOS

Dietzel Hydraulik GmbH
Leedenstraße 10
04626 Löbichau

Tel.: +49 (36602) 140-140

E-Mail: vertrieb@dietzel-hydraulik.de

Pressure fittings

SFL Straight

Updated at:
24.05.2022

Connection
SAE flange 3000PSI (L series)

Standard
ISO 6162-1

Application
4SH flexible tubes

Material
Steel

Surface protection
Zinc-electroplated

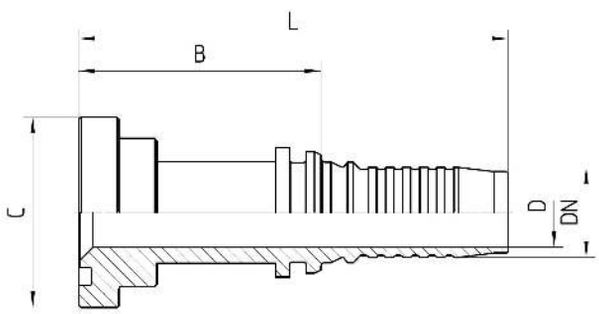

Order no.	DN in mm	flange in inch	C in mm	min. D in mm	B±3 in mm	L±3 in mm	Note
5.420-08-12	19	1/2	30,2	13,5	51	92	
5.420-12-12	19	3/4	38,1	14,8	52	93	
5.420-16-12	19	1	44,5	14,8	52	93	
5.420-12-16	25	3/4	38,1	20,0	56	108	*
5.420-16-16	25	1	44,5	20,0	56	108	*
5.420-20-16	25	1 1/4	50,8	20,0	55	107	*
5.420-16-20	31	1	44,5	25,0	60	129	
5.420-20-20	31	1 1/4	50,8	25,0	59	128	

Dietzel Hydraulik GmbH
Leedenstraße 10
04626 Löbichau

Tel.: +49 (36602) 140-140

E-Mail: vertrieb@dietzel-hydraulik.de

Order no.	DN in mm	flange in inch	C in mm	min. D in mm	B±3 in mm	L±3 in mm	Note
5.420-24-20	31	1 1/2	60,3	25,0	61	130	
5.420-20-24	38	1 1/4	50,8	26,0	60	129	
5.420-24-24	38	1 1/2	60,3	30,0	62	131	
5.420-32-24	38	2	71,4	30,0	62	131	
5.420-24-32	51	1 1/2	60,3	30,0	76	145	
5.420-32-32	51	2	71,4	40,0	79	144	

Note
* changed outline to improve the safety, therefore measurements differ from standard systems

Accessories
O-ring SAE flange

Dietzel Hydraulik GmbH
Leedenstraße 10
04626 Löbichau

Tel.: +49 (36602) 140-140

E-Mail: vertrieb@dietzel-hydraulik.de

Pressure fittings

SFL 45°

Updated at:
11.01.2023

Connection
SAE flange 3000PSI (L series)

Standard
ISO 6162-1

Application
4SH flexible tubes

Material
Steel

Surface protection
Zinc-electroplated

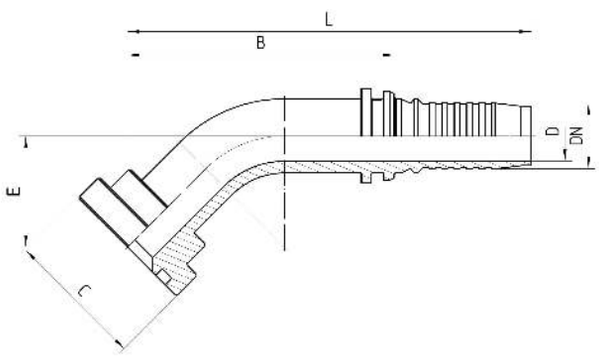

Order no.	DN in mm	flange in inch	C in mm	min. D in mm	E±3 in mm	B±3 in mm	L±3 in mm	Note
5.450-08-12	19	1/2	30,2	13,5	34	77	118	
5.450-12-12	19	3/4	38,1	14,8	30	79	120	
5.450-16-12	19	1	44,5	14,8	34	77	118	
5.450-12-16	25	3/4	38,1	23,0	32	88	140	*
5.450-16-16	25	1	44,5	20,0	32	88	140	*
5.450-20-16	25	1 1/4	50,8	20,0	32	88	140	*
5.450-16-20	31	1	44,5	25,0	44	115	184	
5.450-20-20	31	1 1/4	50,8	25,0	42	113	182	

Dietzel Hydraulik GmbH
Leedenstraße 10
04626 Löbichau

Tel.: +49 (36602) 140-140

E-Mail: vertrieb@dietzel-hydraulik.de

Order no.	DN in mm	flange in inch	C in mm	min. D in mm	E±3 in mm	B±3 in mm	L±3 in mm	Note
5.450-24-20	31	1 1/2	60,3	25,0	50	118	187	
5.450-20-24	38	1 1/4	50,8	26,0	50	113	182	
5.450-24-24	38	1 1/2	60,3	30,0	50	126	195	
5.450-32-24	38	2	71,4	30,0	45	116	185	
5.450-24-32	51	1 1/2	60,3	30,0	52	127	192	
5.450-32-32	51	2	71,4	40,0	65	138	203	

Note
* changed outline to improve the safety, therefore measurements differ from standard systems

Accessories
O-ring SAE flange

Dietzel Hydraulik GmbH
Leedenstraße 10
04626 Löbichau

Tel.: +49 (36602) 140-140

E-Mail: vertrieb@dietzel-hydraulik.de

Pressure fittings

SFL 90°

Updated at:
24.05.2022

Connection
SAE flange 3000PSI (L series)

Standard
ISO 6162-1

Application
4SH flexible tubes

Material
Steel

Surface protection
Zinc-electroplated

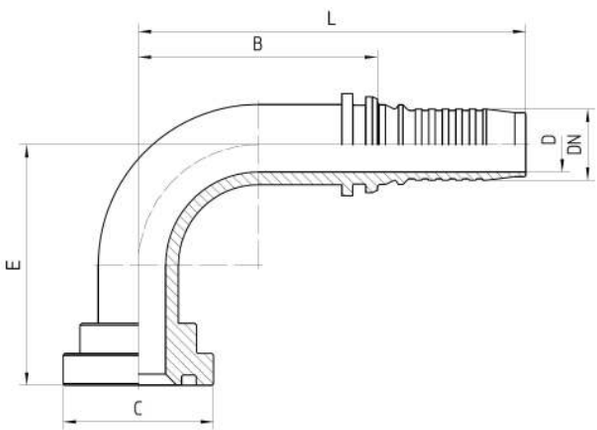

Order no.	DN in mm	flange in inch	C in mm	min. D in mm	E±3 in mm	B±3 in mm	L±3 in mm	Note
5.470-08-12	19	1/2	30,2	13,5	61	60	101	
5.470-12-12	19	3/4	38,1	14,8	64	56	97	
5.470-16-12	19	1	44,5	14,8	65	60	101	
5.470-12-16	25	3/4	38,1	20,0	62	81	133	*
5.470-16-16	25	1	44,5	20,0	62	81	133	*
5.470-20-16	25	1 1/4	50,8	20,0	62	81	133	*
5.470-16-20	31	1	44,5	23,0	103	102	171	

Dietzel Hydraulik GmbH
Leedenstraße 10
04626 Löbichau

Tel.: +49 (36602) 140-140

E-Mail: vertrieb@dietzel-hydraulik.de

Order no.	DN in mm	flange in inch	C in mm	min. D in mm	E±3 in mm	B±3 in mm	L±3 in mm	Note
5.470-20-20	31	1 1/4	50,8	25,0	101	102	171	
5.470-24-20	31	1 1/2	60,3	25,0	109	102	171	
5.470-20-24	38	1 1/4	50,8	26,0	109	121	190	
5.470-24-24	38	1 1/2	60,3	30,0	109	121	190	
5.470-32-24	38	2	71,4	30,0	111	121	190	
5.470-24-32	51	1 1/2	60,3	30,0	120	123	188	
5.470-32-32	51	2	71,4	40,0	140	123	188	

Note
* changed outline to improve the safety, therefore measurements differ from standard systems

Accessories
O-ring SAE flange

Dietzel Hydraulik GmbH
Leedenstraße 10
04626 Löbichau

Tel.: +49 (36602) 140-140

E-Mail: vertrieb@dietzel-hydraulik.de

Pressure fittings

SFS Straight

Updated at:
24.05.2022

Connection
SAE flange 6000PSI (S series)

Standard
ISO 6162-2

Application
4SH flexible tubes

Material
Steel

Surface protection
Zinc-electroplated

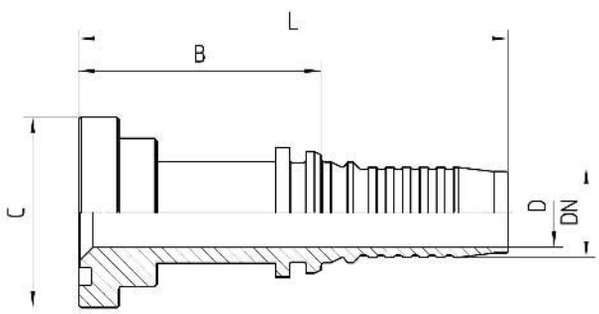

Order no.	DN in mm	flange in inch	C in mm	min. D in mm	B±3 in mm	L±3 in mm	Note
5.421-08-12	19	1/2	31,7	14,0	52	93	
5.421-12-12	19	3/4	41,3	14,8	52	93	
5.421-16-12	19	1	47,6	14,8	54	95	
5.421-12-16	25	3/4	41,3	20,0	57	109	*
5.421-16-16	25	1	47,6	20,0	58	110	*
5.421-20-16	25	1 1/4	54,0	20,0	59	111	*
5.421-16-20	31	1	47,6	25,0	60	129	
5.421-20-20	31	1 1/4	54,0	25,0	65	134	

Dietzel Hydraulik GmbH
Leedenstraße 10
04626 Löbichau

Tel.: +49 (36602) 140-140

E-Mail: vertrieb@dietzel-hydraulik.de

Order no.	DN in mm	flange in inch	C in mm	min. D in mm	B±3 in mm	L±3 in mm	Note
5.421-24-20	31	1 1/2	63,5	25,0	65	134	
5.421-20-24	38	1 1/4	54,0	26,0	64	133	
5.421-24-24	38	1 1/2	63,5	30,0	66	135	
5.421-32-24	38	2	79,4	30,0	75	144	
5.421-24-32	51	1 1/2	63,5	30,0	87	152	
5.421-32-32	51	2	79,4	40,0	93	158	

Note
* changed outline to improve the safety, therefore measurements differ from standard systems

Dietzel Hydraulik GmbH
Leedenstraße 10
04626 Löbichau

Tel.: +49 (36602) 140-140

E-Mail: vertrieb@dietzel-hydraulik.de

Pressure fittings

SFS 45°

Updated at:
11.01.2023

Connection
SAE flange 6000PSI (S series)

Standard
ISO 6162-2

Application
4SH flexible tubes

Material
Steel

Surface protection
Zinc-electroplated

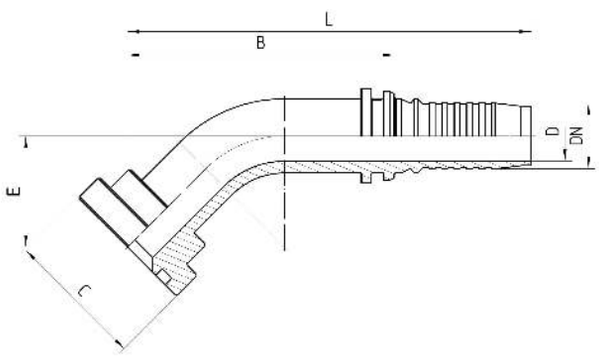

Order no.	DN in mm	flange in inch	C in mm	min. D in mm	E±3 in mm	B±3 in mm	L±3 in mm	Note
5.451-08-12	19	1/2	31,7	14,0	33	79	120	
5.451-12-12	19	3/4	41,3	14,8	32	78	119	
5.451-16-12	19	1	47,6	14,8	36	76	117	
5.451-12-16	25	3/4	41,3	20,0	35	88	140	*
5.451-16-16	25	1	47,6	20,0	38	92	144	*
5.451-20-16	25	1 1/4	54,0	20,0	35	93	145	*
5.451-16-20	31	1	47,6	25,0	45	116	185	
5.451-20-20	31	1 1/4	54,0	25,0	45	116	185	

Dietzel Hydraulik GmbH
Leedenstraße 10
04626 Löbichau

Tel.: +49 (36602) 140-140

E-Mail: vertrieb@dietzel-hydraulik.de

Order no.	DN in mm	flange in inch	C in mm	min. D in mm	E±3 in mm	B±3 in mm	L±3 in mm	Note
5.451-24-20	31	1 1/2	63,5	25,0	53	121	190	
5.451-20-24	38	1 1/4	54,0	26,0	53	131	200	
5.451-24-24	38	1 1/2	63,5	30,0	53	116	185	
5.451-32-24	38	2	79,4	30,0	55	126	195	
5.451-24-32	51	1 1/2	63,5	30,0	55	130	195	
5.451-32-32	51	2	79,4	40,0	55	130	195	

Note
* changed outline to improve the safety, therefore measurements differ from standard systems

Accessories
O-ring SAE flange

Dietzel Hydraulik GmbH
Leedenstraße 10
04626 Löbichau

Tel.: +49 (36602) 140-140

E-Mail: vertrieb@dietzel-hydraulik.de

Pressure fittings

SFS 90°

Updated at:
24.05.2022

Connection
SAE flange 6000PSI (S series)

Standard
ISO 6162-2

Application
4SH flexible tubes

Material
Steel

Surface protection
Zinc-electroplated

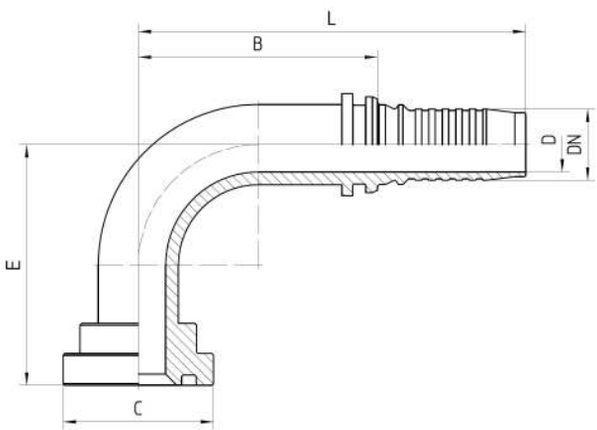

Order no.	DN in mm	flange in inch	C in mm	min. D in mm	E±3 in mm	B±3 in mm	L±3 in mm	Note
5.471-08-12	19	1/2	31,7	14,0	66	60	101	
5.471-12-12	19	3/4	41,3	14,8	65	60	101	
5.471-16-12	19	1	47,6	14,8	70	60	101	
5.471-12-16	25	3/4	41,3	20,0	72	81	133	*
5.471-16-16	25	1	47,6	20,0	72	81	133	*
5.471-20-16	25	1 1/4	54,0	20,0	90	81	133	*
5.471-16-20	31	1	47,6	25,0	105	102	171	

Dietzel Hydraulik GmbH
Leedenstraße 10
04626 Löbichau

Tel.: +49 (36602) 140-140

E-Mail: vertrieb@dietzel-hydraulik.de

Order no.	DN in mm	flange in inch	C in mm	min. D in mm	E±3 in mm	B±3 in mm	L±3 in mm	Note
5.471-20-20	31	1 1/4	54,0	25,0	105	102	171	
5.471-24-20	31	1 1/2	63,5	25,0	113	102	171	
5.471-20-24	38	1 1/4	54,0	26,0	113	121	190	
5.471-24-24	38	1 1/2	63,5	30,0	113	121	190	
5.471-32-24	38	2	79,4	30,0	124	121	190	
5.471-24-32	51	1 1/2	63,5	30,0	124	123	188	
5.471-32-32	51	2	79,4	40,0	124	123	188	

Note
* changed outline to improve the safety, therefore measurements differ from standard systems

Dietzel Hydraulik GmbH
Leedenstraße 10
04626 Löbichau

Tel.: +49 (36602) 140-140

E-Mail: vertrieb@dietzel-hydraulik.de

Pressure fittings

CAT flange straight

Updated at:
24.05.2022

Connection
CAT flange

Application
4SH flexible tubes

Material
Steel

Surface protection
Zinc-electroplated

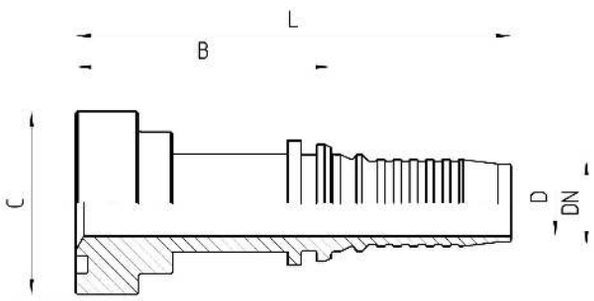

Order no.	DN in mm	flange in inch	C in mm	min. D in mm	B±3 in mm	L±3 in mm	Note
5.426-12-12	19	3/4	41,3	14,8	52	93	
5.426-16-12	19	1	47,6	14,8	51	92	
5.426-12-16	25	3/4	41,3	20,0	58	110	*
5.426-16-16	25	1	47,6	20,0	60	112	*
5.426-20-16	25	1 1/4	54,0	20,0	63	115	*
5.426-16-20	31	1	47,6	23,0	66	135	
5.426-20-20	31	1 1/4	54,0	25,0	67	136	
5.426-24-20	31	1 1/2	63,5	25,0	68	137	
5.426-20-24	38	1 1/4	54,0	23,0	68	137	
5.426-24-24	38	1 1/2	63,5	30,0	69	138	

Dietzel Hydraulik GmbH
Leedenstraße 10
04626 Löbichau

Tel.: +49 (36602) 140-140

E-Mail: vertrieb@dietzel-hydraulik.de

Order no.	DN in mm	flange in inch	C in mm	min. D in mm	B±3 in mm	L±3 in mm	Note
5.426-24-32	51	1 1/2	63,5	30,0	90	155	

Note
* changed outline to improve the safety, therefore measurements differ from standard systems

Dietzel Hydraulik GmbH
Leedenstraße 10
04626 Löbichau

Tel.: +49 (36602) 140-140

E-Mail: vertrieb@dietzel-hydraulik.de

Pressure fittings

CAT flange 45°

Updated at:
24.05.2022

Connection
CAT flange

Application
4SH flexible tubes

Material
Steel

Surface protection
Zinc-electroplated

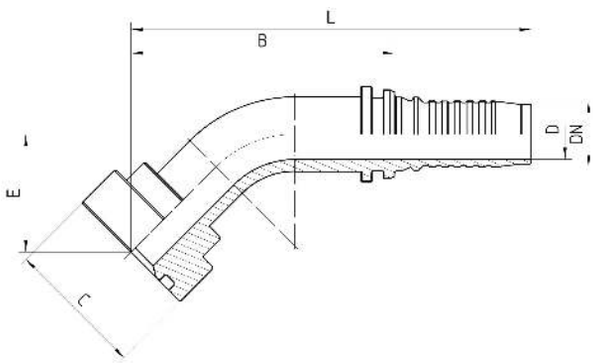

Order no.	DN in mm	Flange in inch	C in mm	min. D in mm	E±3 in mm	B±3 in mm	L±3 in mm	Note
5.456-12-12	19	3/4	41,3	14,8	35	78	119	
5.456-16-12	19	1	47,6	14,8	35	78	122	
5.456-12-16	25	3/4	41,3	20,0	59	97	149	*
5.456-16-16	25	1	47,6	20,0	38	96	148	*
5.456-20-16	25	1 1/4	54,0	20,0	38	96	148	*
5.456-16-20	31	1	47,6	23,0	48	119	188	
5.456-20-20	31	1 1/4	54,0	25,0	48	119	188	
5.456-24-20	31	1 1/2	63,5	25,0	55	123	192	
5.456-20-24	38	1 1/4	54,0	23,0	56	119	188	
5.456-24-24	38	1 1/2	63,5	30,0	55	118	187	

Dietzel Hydraulik GmbH
Leedenstraße 10
04626 Löbichau

Tel.: +49 (36602) 140-140

E-Mail: vertrieb@dietzel-hydraulik.de

Order no.	DN in mm	Flange in inch	C in mm	min. D in mm	E±3 in mm	B±3 in mm	L±3 in mm	Note
5.456-24-32	51	1 1/2	63,5	30,0	57	132	197	

Note
* changed outline to improve the safety, therefore measurements differ from standard systems

Dietzel Hydraulik GmbH
Leedenstraße 10
04626 Löbichau

Tel.: +49 (36602) 140-140

E-Mail: vertrieb@dietzel-hydraulik.de

Pressure fittings

CAT flange 90°

Updated at:
24.05.2022

Connection
CAT flange

Application
4SH flexible tubes

Material
Steel

Surface protection
Zinc-electroplated

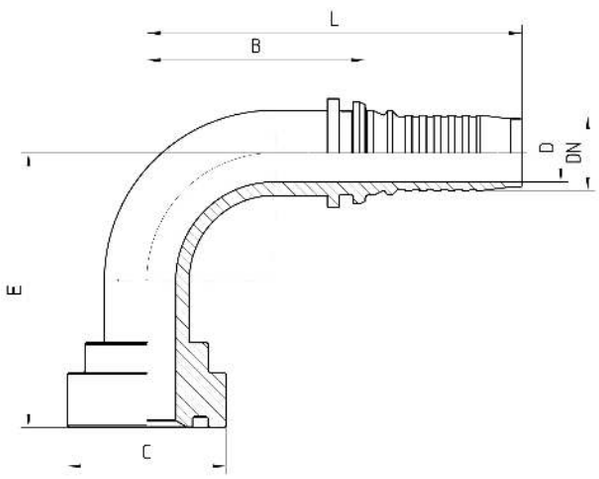

Order no.	DN in mm	Flange in inch	C in mm	min. D in mm	E±3 in mm	B±3 in mm	L±3 in mm	Note
5.476-12-12	19	3/4	41,3	14,8	65	60	101	
5.476-16-12	19	1	47,6	14,8	68	57	98	
5.476-12-16	25	3/4	41,3	20,0	77	81	133	*
5.476-16-16	25	1	47,6	20,0	76	81	133	*
5.476-20-16	25	1 1/4	54,0	20,0	94	81	133	*
5.476-16-20	31	1	47,6	23,0	109	102	171	
5.476-20-20	31	1 1/4	54,0	25,0	109	102	171	
5.476-24-20	31	1 1/2	63,5	25,0	116	102	171	
5.476-20-24	38	1 1/4	54,0	23,0	117	121	190	

Dietzel Hydraulik GmbH
Leedenstraße 10
04626 Löbichau

Tel.: +49 (36602) 140-140

E-Mail: vertrieb@dietzel-hydraulik.de

Order no.	DN in mm	Flange in inch	C in mm	min. D in mm	E±3 in mm	B±3 in mm	L±3 in mm	Note
5.476-24-24	38	1 1/2	63,5	30,0	116	121	190	
5.476-24-32	51	1 1/2	63,5	30,0	127	123	188	

Note
* geänderte Kontur aus sicherheitsrelevanten Gründen, daher Maßabweichungen vom marktüblichen System

Dietzel Hydraulik GmbH
Leedenstraße 10
04626 Löbichau

Tel.: +49 (36602) 140-140

E-Mail: vertrieb@dietzel-hydraulik.de

Pressure fittings

4SH SKIVE (540)

Updated at:
24.05.2022

Application
SKIVE 4SH press holder for dH5000 4SH hoses

Material
Steel

Surface protection
Zinc-electroplated

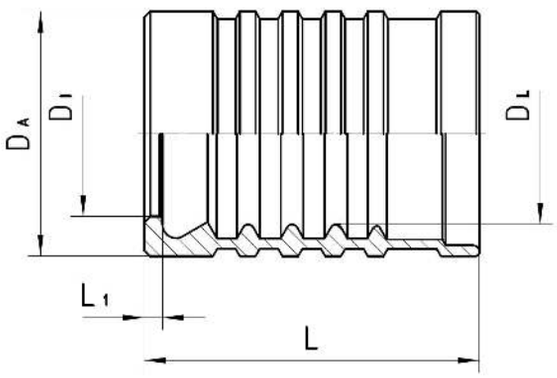

Order no.	DN in mm	DA in mm	DI in mm	DL in mm	L in mm	L1 in mm	Note
540-12	19	40,0	27,1	29,7	55,0	3,0	
540-16	25	48,6	33,5	36,6	68,5	3,4	*
540-20	31	57,0	40,0	45,0	75,1	3,5	
540-24	38	62,0	43,2	50,0	75,6	3,9	
540-32	51	78,2	57,9	65,9	75,0	5,0	

Note
* The proper crimping of the fittings needs to be verfied by the hose manufacturer with appropriate tools.

Dietzel Hydraulik GmbH
Leedenstraße 10
04626 Löbichau

Tel.: +49 (36602) 140-140

E-Mail: vertrieb@dietzel-hydraulik.de

Pressure fittings

CES straight

Updated at:
24.05.2022

Connection
Metric male thread 24° with inner cone, and pipe connection S series

Standard
ISO 8434-1

Application
4SH / R15 / R13 (DN51) flexible tubes

Material
Steel

Surface protection
Zinc-electroplated

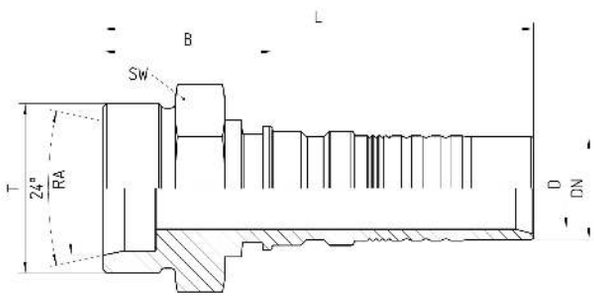

Order no.	DN in mm	RA	T	SW in mm	min. D in mm	B±3 in mm	L±3 in mm
7.180-10-10	16	20S	M 30X2	32	12,0	36	88
7.180-12-12	19	25S	M 36X2	36	15,0	41	98
7.180-16-16	25	30S	M 42x2	46	20,0	43	110
7.180-20-20	31	38S	M 52x2	55	25,0	52	132
7.180-24-24	38	50S	M 68x2	70	30,0	57	148

Dietzel Hydraulik GmbH
Leedenstraße 10
04626 Löbichau

Tel.: +49 (36602) 140-140

E-Mail: vertrieb@dietzel-hydraulik.de

Pressure fittings

DKOS straight

Updated at:
24.05.2022

Connection
Sealing head 24° outside cone O-ring sealing with metric nut S series

Standard
ISO 8434-1

Application
4SH / R15 / R13 (DN51) flexible tubes

Material
Steel

Surface protection
Zinc-electroplated

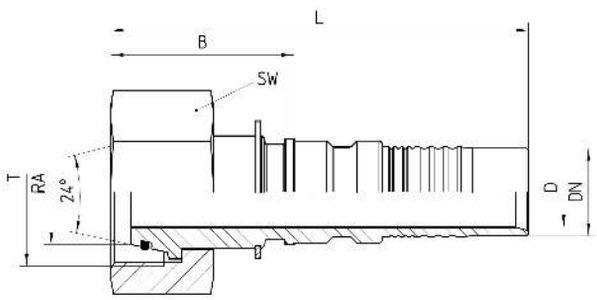

Order no.	DN in mm	RA	T	SW in mm	min. D in mm	B±3 in mm	L±3 in mm	Note
7.081-10-10	16	20S	M 30x2	36	12,0	33	84,5	
7.081-12-12/ SW41	19	25S	M 36x2	41	15,0	37	93	a
7.081-12-12/ SW46	19	25S	M 36x2	46	15,0	37	93	
7.081-12-16/ SW46	25	25S	M 36x2	46	17,0	39	106	b
7.081-16-16	25	30S	M 42x2	50	20,0	46	113	
7.581-20-16	25	38S	M 52x2	60	20,0	57	126	
7.081-16-20	31	30S	M 42x2	50	21,0	45	125	b

Dietzel Hydraulik GmbH
Leedenstraße 10
04626 Löbichau

Tel.: +49 (36602) 140-140

E-Mail: vertrieb@dietzel-hydraulik.de

Order no.	DN in mm	RA	T	SW in mm	min. D in mm	B±3 in mm	L±3 in mm	Note
7.581-20-20	31	38S	M 52x2	60	25,0	62	142	
7.581-20-24	38	38S	M 52x2	60	30,0	49	140	b
7.081-24-24	38	50S	M 68x2	80	30,0	44	135	
7.081-24-32	51	50S	M 68x2	80	40,0	61	152	b

Note
a) not according to ISO 8434-1, b) wire nut

Accessories
O-ring DKOL/DKOS

Dietzel Hydraulik GmbH
Leedenstraße 10
04626 Löbichau

Tel.: +49 (36602) 140-140

E-Mail: vertrieb@dietzel-hydraulik.de

Pressure fittings

DKOS 45°

Updated at:
24.05.2022

Connection
Sealing head 24° outside cone O-ring sealing with metric nut S series

Standard
ISO 8434-1

Application
4SH / R15 / R13 (DN51) flexible tubes

Material
Steel

Surface protection
Zinc-electroplated

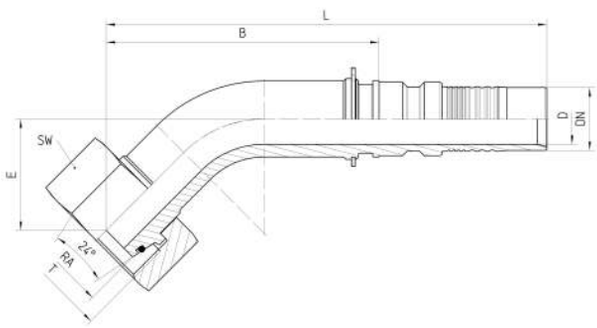

Order no.	DN in mm	RA	T	SW in mm	min. D in mm	E±3 in mm	B±3 in mm	L±3 in mm	Note
7.085-10-10	16	20S	M 30x2	36	12,0	30	73	120	
7.085-12-12/ SW41	19	25S	M 36x2	41	15,0	41	92	148	a
7.085-12-12/ SW46	19	25S	M 36x2	46	15,0	41	92	148	
7.085-12-16/ SW46	25	25S	M 36x2	46	17,0	48	119	185	b
7.085-16-16	25	30S	M 42x2	50	20,0	44	108	175	
7.585-20-16	25	38S	M 52x2	60	20,0	60	151	218	
7.585-20-20	31	38S	M 52x2	60	25,0	56	143	223	

Dietzel Hydraulik GmbH
Leedenstraße 10
04626 Löbichau

Tel.: +49 (36602) 140-140

E-Mail: vertrieb@dietzel-hydraulik.de

Order no.	DN in mm	RA	T	SW in mm	min. D in mm	E±3 in mm	B±3 in mm	L±3 in mm	Note
7.585-20-24	38	38S	M 52x2	60	25,0	52	154	245	b

Note
a) not according to ISO 8434-1, b) wire nut

Accessories
O-ring DKOL/DKOS

Dietzel Hydraulik GmbH
Leedenstraße 10
04626 Löbichau

Tel.: +49 (36602) 140-140

E-Mail: vertrieb@dietzel-hydraulik.de

Pressure fittings

DKOS 90°

Updated at:
24.05.2022

Connection
Sealing head 24° outside cone O-ring sealing with metric nut S series

Standard
ISO 8434-1

Application
4SH / R15 / R13 (DN51) flexible tubes

Material
Steel

Surface protection
Zinc-electroplated

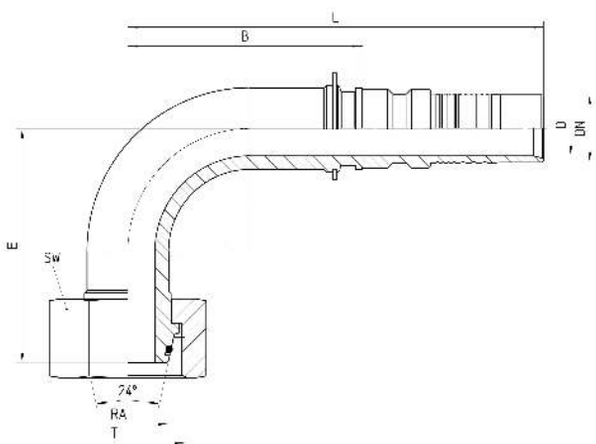

Order no.	DN in mm	RA	T	SW in mm	min. D in mm	E±3 in mm	B±3 in mm	L±3 in mm	Note
7.089-10-10	16	20S	M 30x2	36	12,0	59	52	104	
7.089-12-12/ SW41	19	25S	M 36x2	41	15,0	71	65	121	a
7.089-12-12/ SW46	19	25S	M 36x2	46	15,0	71	65	121	
7.089-16-12	19	30S	M 42x2	50	15,0	74	65	121	
7.089-12-16/ SW46	25	25S	M 36x2	46	17,0	94	93	160	b
7.089-16-16	25	30S	M 42x2	50	20,0	86	84	153	
7.589-20-16	25	38S	M 52x2	60	20,0	111	84	151	

Dietzel Hydraulik GmbH
Leedenstraße 10
04626 Löbichau

Tel.: +49 (36602) 140-140

E-Mail: vertrieb@dietzel-hydraulik.de

Order no.	DN in mm	RA	T	SW in mm	min. D in mm	E±3 in mm	B±3 in mm	L±3 in mm	Note
7.589-20-20	31	38S	M 52x2	60	25,0	110	117	197	
7.589-20-24	38	38S	M 52x2	60	25,0	135	124	215	b

Note
a) not according to ISO 8434-1, b) wire nut

Accessories
O-ring DKOL/DKOS

Dietzel Hydraulik GmbH
Leedenstraße 10
04626 Löbichau

Tel.: +49 (36602) 140-140

E-Mail: vertrieb@dietzel-hydraulik.de

Pressure fittings

DKOS Hammer Drill straight

Updated at:
24.05.2022

Connection
Sealing head 24° outside cone O-ring sealing with metric nut S series

Standard
ISO 8434-1

Application
4SH / R15 / R13 (DN51) flexible tubes

Material
Steel

Surface protection
Zinc-electroplated

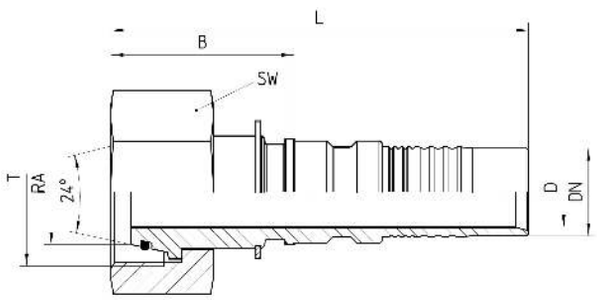

Order no.	DN in mm	RA	T in inch	SW in mm	min.D in mm	B±3 in mm	L±3 in mm	Ferrules for 4 SH Order no.	Ferrules for R15 Order no.
7.581-12-12/ BH	19	25S	M 36x2	46	12,0	50	104	740-12	740-12
7.581-16-16/ BH	25	30S	M 42x2	50	17,0	52	121	740-16	740-16
7.581-20-20/ BH	31	38S	M 52x2	60	22,0	62	142	740-20	760-20

Accessories
O-ring DKOL/DKOS

Dietzel Hydraulik GmbH
Leedenstraße 10
04626 Löbichau

Tel.: +49 (36602) 140-140

E-Mail: vertrieb@dietzel-hydraulik.de

Pressure fittings

AGR cylindrical straight

Updated at:
24.05.2022

Connection
BSPP male thread (G) with 60° inner cone

Standard
ISO 8434-6

Application
4SH / R15 / R13 (DN51) flexible tubes

Material
Steel

Surface protection
Zinc-electroplated

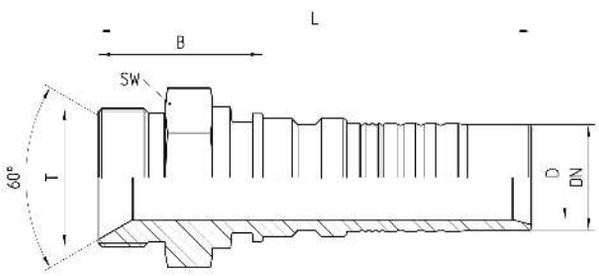

Order no.	DN	T in inch	SW in mm	min. D in mm	B±3 in mm	L±3 in mm
7.260-12-12	19	G 3/4	30	15,0	37	93
7.260-16-16	25	G 1	36	20,0	46	112
7.260-20-20	31	G 1 1/4	46	25,0	49	129
7.260-24-24	38	G 1 1/2	55	30,0	51	142
7.260-32-32	51	G 2	65	40,0	57	148

Dietzel Hydraulik GmbH
Leedenstraße 10
04626 Löbichau

Tel.: +49 (36602) 140-140

E-Mail: vertrieb@dietzel-hydraulik.de

Pressure fittings

DKOR straight

Updated at:
24.05.2022

Connection
Sealing head 60° outside cone O-ring sealing with BSPP nut (G)

Standard
ISO 8434-6

Application
4SH / R15 / R13 (DN51) flexible tubes

Material
Steel

Surface protection
Zinc-electroplated

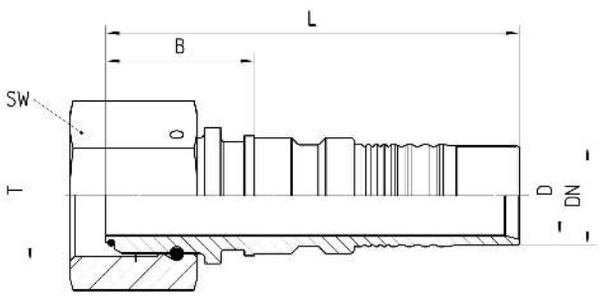

Order no.	DN in mm	T in inch	SW in mm	min. D in mm	B±3 in mm	L±3 in mm
7.203-12-12/O	19	G 3/4	32	15,0	56	87
7.203-16-16/O	25	G 1	41	20,0	37	104
7.203-20-20/O	31	G 1 1/4	50	25,0	39	119
7.203-24-24/O	38	G 1 1/2	55	30,0	37	129
7.203-32-32/O	51	G 2	70	40,0	91	137

Dietzel Hydraulik GmbH
Leedenstraße 10
04626 Löbichau

Tel.: +49 (36602) 140-140

E-Mail: vertrieb@dietzel-hydraulik.de

Pressure fittings

DKOR 45°

Updated at:
24.05.2022

Connection
Sealing head 60° outside cone O-ring sealing with BSPP nut (G)

Standard
ISO 8434-6

Application
4SH / R15 / R13 (DN51) flexible tubes

Material
Steel

Surface protection
Zinc-electroplated

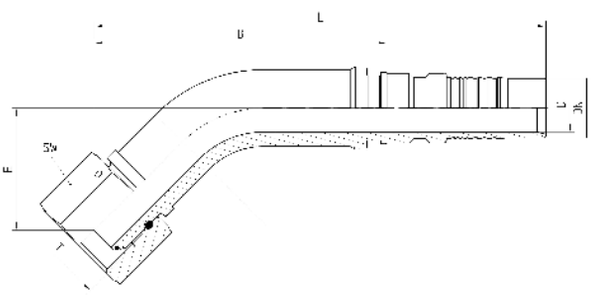

Order no.	DN in mm	T in inch	SW in mm	min. D in mm	E±3 in mm	B±3 in mm	L±3 in mm
7.233-12-12/O	19	G 3/4	32	15,0	39	95	151
7.233-16-16/O	25	G 1	41	20,0	51	122	189
7.233-20-20/O	31	G 1 1/4	50	25,0	54	145	225
7.233-24-24/O	38	G 1 1/2	55	30,0	68	157	248
7.233-32-32/O	51	G 2	70	40,0	76	190	281

Dietzel Hydraulik GmbH
Leedenstraße 10
04626 Löbichau

Tel.: +49 (36602) 140-140

E-Mail: vertrieb@dietzel-hydraulik.de

Pressure fittings

DKOR 90°

Updated at:
24.05.2022

Connection
Sealing head 60° outside cone O-ring sealing with BSPP nut (G)

Standard
ISO 8434-6

Application
4SH / R15 / R13 (DN51) flexible tubes

Material
Steel

Surface protection
Zinc-electroplated

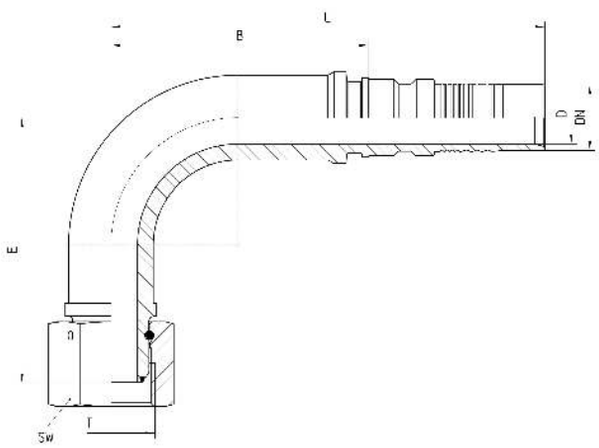

Order no.	DN in mm	T in inch	SW in mm	min. D in mm	E±3 in mm	B±3 in mm	L±3 in mm
7.243-12-12/O	19	G 3/4	32	15,0	75	65	121
7.243-16-16/O	25	G 1	41	20,0	100	93	160
7.243-20-20/O	31	G 1 1/4	50	25,0	109	117	197
7.243-24-24/O	38	G 1 1/2	55	30,0	132	131	222
7.243-32-32/O	51	G 2	70	40,0	150	139	230

Dietzel Hydraulik GmbH
Leedenstraße 10
04626 Löbichau

Tel.: +49 (36602) 140-140

E-Mail: vertrieb@dietzel-hydraulik.de

Pressure fittings

AGJ straight

Updated at:
24.05.2022

Connection
UN male thread with 74° outside cone

Standard
ISO 8434-2

Application
4SH / R15 / R13 (DN51) flexible tubes

Material
Steel

Surface protection
Zinc-electroplated

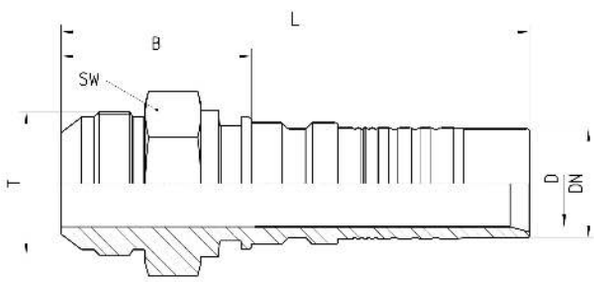

Order no.	DN	T in UN	SW in mm	min. D in mm	B±3 in mm	L±3 in mm
7.370-12-12	19	1 1/16-12 UN	27	15	44	101
7.370-16-16	25	1 5/16-12 UN	36	20	51	118
7.370-20-20	31	1 5/8-12 UN	46	25	55	135
7.370-24-24	38	1 7/8-12 UN	55	30	55	146
7.370-32-32	51	2 1/2-12 UN	65	40	63	154

Dietzel Hydraulik GmbH
Leedenstraße 10
04626 Löbichau

Tel.: +49 (36602) 140-140

E-Mail: vertrieb@dietzel-hydraulik.de

Pressure fittings

DKJ straight

Updated at:
24.05.2022

Connection
Sealing head 74° inner cone with UN nut

Standard
ISO 8434-2

Application
4SH / R15 / R13 (DN51) flexible tubes

Material
Steel

Surface protection
Zinc-electroplated

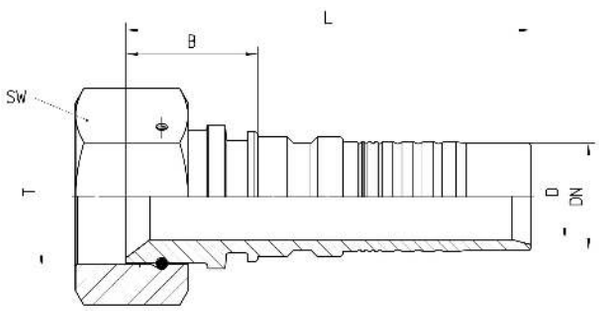

Order no.	DN in mm	T in UN	SW in mm	min.D	B±3 in mm	L±3 in mm
7.313-12-12	19	1 1/16"-12	32	15,0	27	83
7.313-16-16	25	1 5/16"-12	41	20,0	30	96
7.313-20-20	31	1 5/8"-12	55	25,0	39	119
7.313-24-24	38	1 7/8"-12	60	30,0	37	129
7.313-32-32	51	2 1/2"-12	75	40,0	46	137

Dietzel Hydraulik GmbH
Leedenstraße 10
04626 Löbichau

Tel.: +49 (36602) 140-140

E-Mail: vertrieb@dietzel-hydraulik.de

Pressure fittings

DKJ 45°

Updated at:
24.05.2022

Connection
Sealing head 74° inner cone with UN nut

Standard
ISO 8434-2

Application
4SH / R15 / R13 (DN51) flexible tubes

Material
Steel

Surface protection
Zinc-electroplated

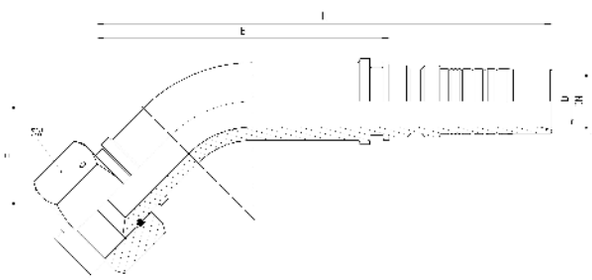

Order no.	DN in mm	T in UN	SW in mm	min.D in mm	E in mm	B±3 in mm	L±3 in mm
7.343-12-12	19	1 1/16-12 UN	32	15,0	36	92	148
7.343-16-16	25	1 5/16-12 UN	41	20,0	50	121	188
7.343-20-20	31	1 5/8-12 UN	55	25,0	53	144	224
7.343-24-24	38	1 7/8-12 UN	60	30,0	68	157	248
7.343-32-32	51	2 1/2-12 UN	75	40,0	76	190	281

Dietzel Hydraulik GmbH
Leedenstraße 10
04626 Löbichau

Tel.: +49 (36602) 140-140

E-Mail: vertrieb@dietzel-hydraulik.de

Pressure fittings

DKJ 90°

Updated at:
24.05.2022

Connection
Sealing head 74° inner cone with UN nut

Standard
ISO 8434-2

Application
4SH / R15 / R13 (DN51) flexible tubes

Material
Steel

Surface protection
Zinc-electroplated

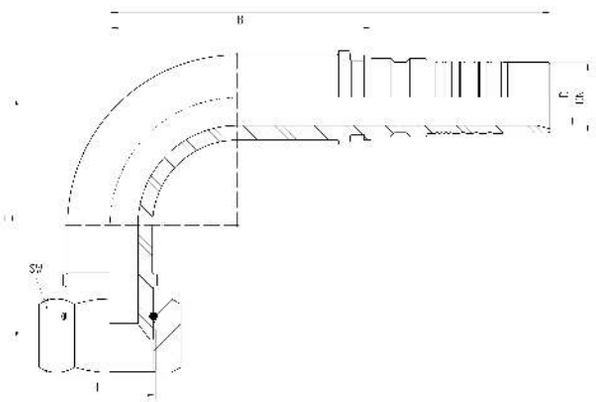

Order no.	DN in mm	T in inch	SW in mm	min.D in mm	E ±3 in mm	B±3 in mm	L±3 in mm
7.353-12-12	19	1 1/16-12 UN	32	15,0	71	65	121
7.353-16-16	25	1 5/16-12 UN	41	20,0	98	97	164
7.353-20-20	31	1 5/8-12 UN	55	25,0	108	117	197
7.353-24-24	38	1 7/8-12 UN	60	30,0	132	131	222
7.353-32-32	51	2 1/2-12 UN	75	40,0	150	139	230

Dietzel Hydraulik GmbH
Leedenstraße 10
04626 Löbichau

Tel.: +49 (36602) 140-140

E-Mail: vertrieb@dietzel-hydraulik.de

Pressure fittings

ORS straight

Updated at:
24.05.2022

Connection
Frontal UN male thread O-ring sealing

Standard
ISO 8434-3

Application
4SH / R15 / R13 (DN51) flexible tubes

Material
Steel

Surface protection
Zinc-electroplated

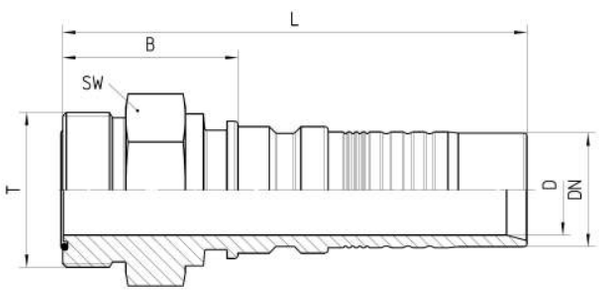

Order no.	DN in mm	T in UN	SW in mm	min. D in mm	B±3 in mm	L±3 in mm
7.380-12-12	19	1.3/16-12 UN	32	15,0	38	94
7.380-16-16	25	1.7/16-12 UN	41	20,0	45	112
7.380-20-20	31	1.11/16-12 UN	46	25,0	49	129
7.380-24-24	38	2-12 UN	55	30,0	49	140

Dietzel Hydraulik GmbH
Leedenstraße 10
04626 Löbichau

Tel.: +49 (36602) 140-140

E-Mail: vertrieb@dietzel-hydraulik.de

Pressure fittings

ORFS straight

Updated at:
24.05.2022

Connection
Flat sealing head with UN nut

Standard
ISO 8434-3

Application
4SH / R15 / R13 (DN51) flexible tubes

Material
Steel

Surface protection
Zinc-electroplated

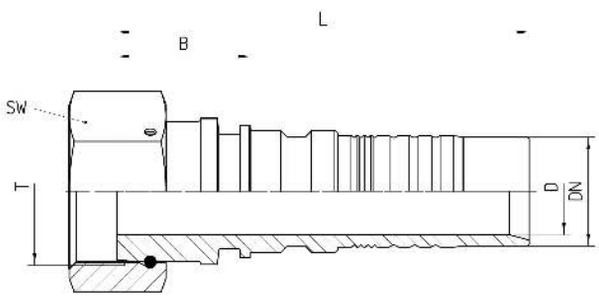

Order no.	DN in mm	T in UN	SW in mm	min. D in mm	B±3 in mm	L±3 in mm
7.315-12-12	19	1 3/16-12 UN	36	15	27	83
7.315-16-16	25	1 7/16-12 UN	41	20	27	94
7.315-20-20	31	1 11/16-12 UN	50	25	38	119
7.315-24-24	38	2-12 UN	60	30	39	131

Dietzel Hydraulik GmbH
Leedenstraße 10
04626 Löbichau

Tel.: +49 (36602) 140-140

E-Mail: vertrieb@dietzel-hydraulik.de

Pressure fittings
ORFS 45°

Updated at:
24.05.2022

Connection
Flat sealing head with UN nut

Standard
ISO 8434-3

Application
4SH / R15 / R13 (DN51) flexible tubes

Material
Steel

Surface protection
Zinc-electroplated

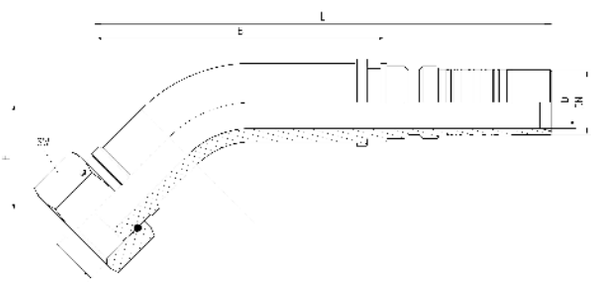

Order no.	DN in mm	T in UN	SW in mm	min. D in mm	E±3 in mm	B±3 in mm	L±3 in mm
7.345-12-12	19	1.3/16-12 UN	36	15,0	36	92	148
7.345-16-16	25	1.7/16-12 UN	41	20,0	46	116	183
7.345-20-20	31	1.11/16-12 UN	50	25,0	53	142	222
7.345-24-24	38	2-12 UN	60	30,0	65	154	245

Dietzel Hydraulik GmbH
Leedenstraße 10
04626 Löbichau

Tel.: +49 (36602) 140-140

E-Mail: vertrieb@dietzel-hydraulik.de

Pressure fittings

ORFS 90°

Updated at:
24.05.2022

Connection
Flat sealing head with UN nut

Standard
ISO 8434-3

Application
4SH / R15 / R13 (DN51) flexible tubes

Material
Steel

Surface protection
Zinc-electroplated

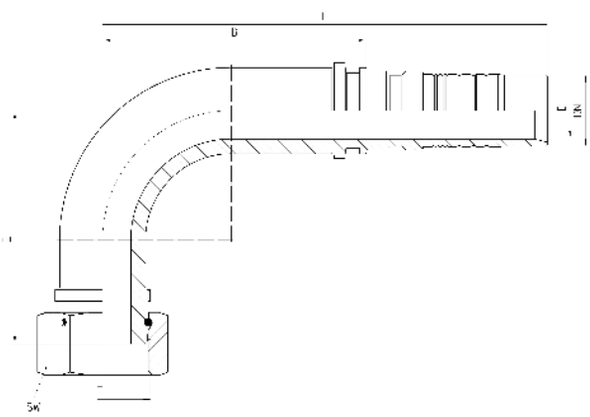

Order no.	DN in mm	T in UN	SW in mm	min. D in mm	E±3 in mm	B±3 in mm	L±3 in mm
7.355-12-12	19	1 3/16-12 UN	36	15,0	70	72	128
7.355-16-16	25	1 7/16-12 UN	41	20,0	87	97	164
7.355-20-20	31	1 11/16-12 UN	50	25,0	103	117	197
7.355-24-24	38	2-12 UN	60	30,0	127	131	222

Dietzel Hydraulik GmbH
Leedenstraße 10
04626 Löbichau

Tel.: +49 (36602) 140-140

E-Mail: vertrieb@dietzel-hydraulik.de

Pressure fittings

AGN straight

Updated at:
24.05.2022

Connection
NPT male thread with 74° outside cone

Application
4SH / R15 / R13 (DN51) flexible tubes

Material
Steel

Surface protection
Zinc-electroplated

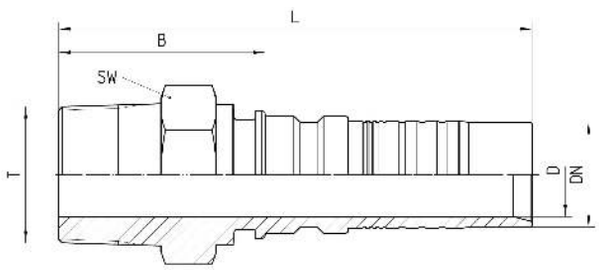

Order no.	DN	T in NPTF	SW in mm	min. D in mm	B±3 in mm	L±3 in mm
7.300-12-12	19	3/4"-14	27	15,0	44	100
7.300-16-16	25	1" -11.1/2	36	20,0	51	118
7.300-20-20	31	1 1/4"-11.1/	46	25,0	62	142
7.300-24-24	38	1 1/2"-11.1/2	55	30,0	59	150
7.300-32-32	51	2"-11.1/2	65	40,0	64	155

Dietzel Hydraulik GmbH
Leedenstraße 10
04626 Löbichau

Tel.: +49 (36602) 140-140

E-Mail: vertrieb@dietzel-hydraulik.de

Pressure fittings

SFL straight

Updated at:
24.05.2022

Connection
SAE flange 3000PSI (L series)

Standard
ISO 6162-1

Application
4SH / R15 / R13 (DN51) flexible tubes

Material
Steel

Surface protection
Zinc-electroplated

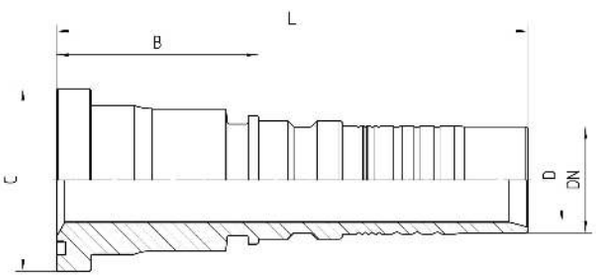

Order no.	DN in mm	flange in inch	C in mm	min. D in mm	B±3 in mm	L±3 in mm
7.420-12-12	19	3/4	38,1	15	54	110
7.420-16-12	19	1	44,5	15	59	115
7.420-16-16	25	1	44,5	20	58	125
7.420-20-16	25	1 1/4	50,8	20	60	127
7.420-16-20	31	1	44,5	25	91	171
7.420-20-20	31	1 1/4	50,8	25	60	140
7.420-20-24	38	1 1/4	50,8	30	99	190
7.420-24-24	38	1 1/2	60,3	30	82	173
7.420-32-32	51	2	71,4	40	101	192

Dietzel Hydraulik GmbH
Leedenstraße 10
04626 Löbichau

Tel.: +49 (36602) 140-140

E-Mail: vertrieb@dietzel-hydraulik.de

Pressure fittings

SFL 45°

Updated at:
24.05.2022

Connection
SAE flange 3000PSI (L series)

Standard
ISO 6162-1

Application
4SH / R15 / R13 (DN51) flexible tubes

Material
Steel

Surface protection
Zinc-electroplated

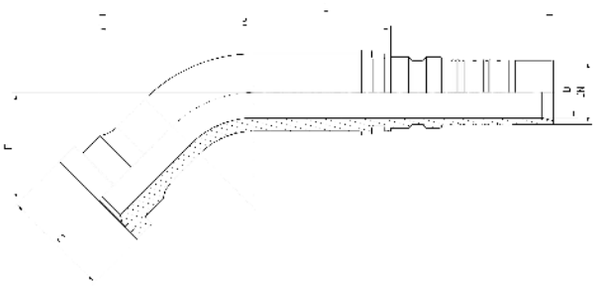

Order no.	DN in mm	flange in inch	C in mm	min. D in mm	E±3 in mm	B±3 in mm	L±3 in mm
7.450-12-12	19	3/4	38,1	15,0	30	81	137
7.450-16-16	25	1	44,5	20,0	46	114	181
7.450-20-20	31	1 1/4	50,8	25,0	53	145	225
7.450-24-24	38	1 1/2	60,3	30,0	60	153	244
7.450-32-32	51	2	71,4	40,0	66	150	241

Dietzel Hydraulik GmbH
Leedenstraße 10
04626 Löbichau

Tel.: +49 (36602) 140-140

E-Mail: vertrieb@dietzel-hydraulik.de

Pressure fittings

SFL 90°

Updated at:
24.05.2022

Connection
SAE flange 36000PSI (L series)

Standard
ISO 6162-1

Application
4SH / R15 / R13 (DN51) flexible tubes

Material
Steel

Surface protection
Zinc-electroplated

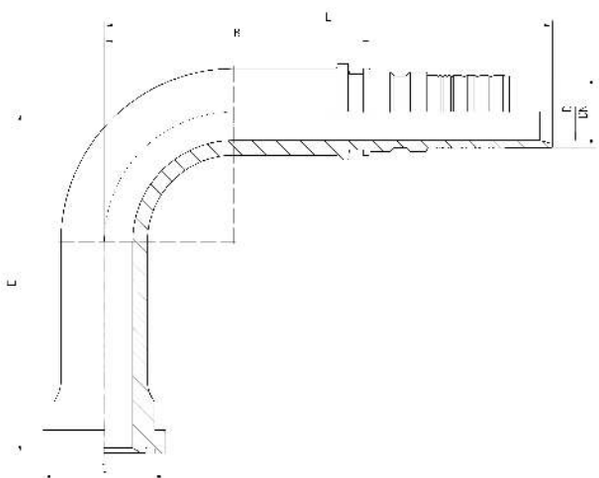

Order no.	DN in mm	flange in inch	C in mm	min. D in mm	E±3 in mm	B±3 in mm	L±3 in mm
7.470-12-12	19	3/4	38,1	15,0	64	72	128
7.470-16-16	25	1	44,5	20,0	88	93	160
7.470-20-20	31	1 1/4	50,8	25,0	108	117	197
7.470-24-24	38	1 1/2	60,3	30,0	117	139	230
7.470-32-24	38	2	71,4	40,0	135	139	230
7.470-32-32	51	2	71,4	40,0	140	133	224

Dietzel Hydraulik GmbH
Leedenstraße 10
04626 Löbichau

Tel.: +49 (36602) 140-140

E-Mail: vertrieb@dietzel-hydraulik.de

Pressure fittings

SFS straight

Updated at:
24.05.2022

Connection
SAE flange 6000PSI (S series)

Standard
ISO 6162-1

Application
4SH / R15 / R13 (DN51) flexible tubes

Material
Steel

Surface protection
Zinc-electroplated

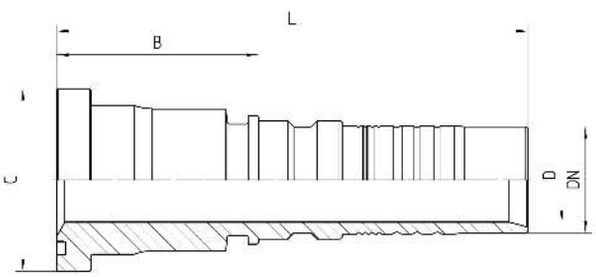

Order no.	DN in mm	flange in inch	C in mm	min. D in mm	B±3 in mm	L±3 in mm
7.421-12-12	19	3/4	41,3	15,0	54	110
7.421-16-12	19	1	47,6	15,0	59	115
7.421-12-16	25	3/4	41,3	20,0	54	121
7.421-16-16	25	1	47,6	20,0	58	125
7.421-20-16	25	1 1/14	54,0	20,0	60	127
7.421-16-20	31	1	47,6	25,0	91	171
7.421-20-20	31	1 1/4	54,0	25,0	60	140
7.421-24-20	31	1 1/2	63,5	25,0	99	162
7.421-20-24	38	1 1/4	54,0	30,0	124	190

Dietzel Hydraulik GmbH
Leedenstraße 10
04626 Löbichau

Tel.: +49 (36602) 140-140

E-Mail: vertrieb@dietzel-hydraulik.de

Order no.	DN in mm	flange in inch	C in mm	min. D in mm	B±3 in mm	L±3 in mm
7.421-24-24	38	1 1/2	63,5	30,0	107	173
7.421-24-32	51	1 1/2	63,5	37,0	108	214
7.421-32-32	51	2	79,4	40,0	101	192

Dietzel Hydraulik GmbH
Leedenstraße 10
04626 Löbichau

Tel.: +49 (36602) 140-140

E-Mail: vertrieb@dietzel-hydraulik.de

Pressure fittings

SFS 45°

Updated at:
24.05.2022

Connection
SAE flange 6000PSI (S series)

Standard
ISO 6162-2

Application
4SH / R15 / R13 (DN51) flexible tubes

Material
Steel

Surface protection
Zinc-electroplated

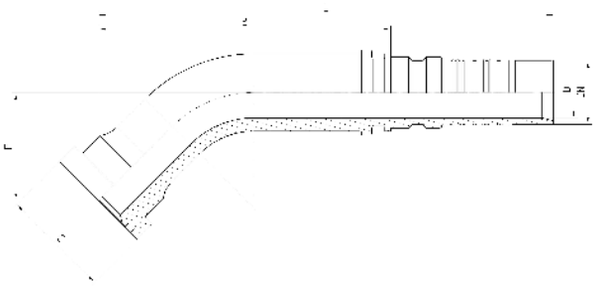

Order no.	DN in mm	flange in inch	C in mm	min. D in mm	E±3 in mm	B±3 in mm	L±3 in mm
7.451-12-12	19	3/4	41,3	15,0	32	81	137
7.451-16-16	25	1	47,6	20,0	44	108	178
7.451-16-20	31	1	47,6	25,0	44	134	215
7.451-20-20	31	1 1/4	54,0	25,0	53	144	224
7.451-20-24	38	1 1/4	54,0	30,0	60	149	240
7.451-24-24	38	1 1/2	63,5	30,0	59	158	249
7.451-32-32	51	2	79,4	40,0	65	152	243

Dietzel Hydraulik GmbH
Leedenstraße 10
04626 Löbichau

Tel.: +49 (36602) 140-140

E-Mail: vertrieb@dietzel-hydraulik.de

Pressure fittings

SFS 90°

Updated at:
24.05.2022

Connection
SAE flange 6000PSI (S series)

Standard
ISO 6162-2

Application
4SH / R15 / R13 (DN51) flexible tubes

Material
Steel

Surface protection
Zinc-electroplated

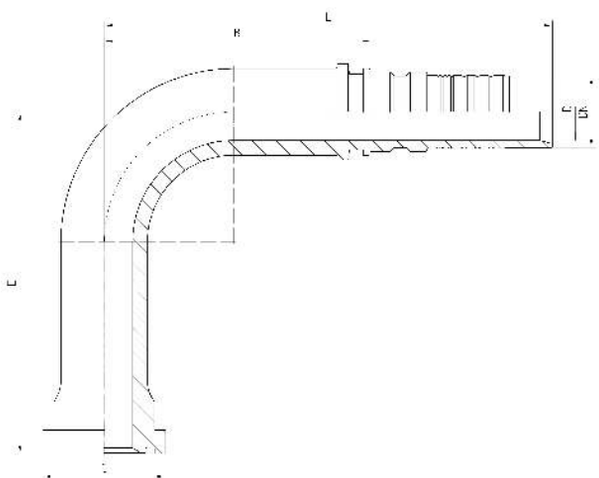

Order no.	DN in mm	flange in inch	C in mm	min. D in mm	E±3 in mm	B±3 in mm	L±3 in mm
7.471-12-12	19	3/4	41,3	15,0	64	71	127
7.471-16-16	25	1	47,6	20,0	88	93	160
7.471-20-16	25	1 1/4	54,0	20,0	100	93	160
7.471-16-20	31	1	47,6	25,0	96	117	197
7.471-20-20	31	1 1/4	54,0	25,0	108	117	197
7.471-20-24	38	1 1/4	54,0	30,0	115	139	230
7.471-24-24	38	1 1/2	63,5	30,0	117	139	230

Dietzel Hydraulik GmbH
Leedenstraße 10
04626 Löbichau

Tel.: +49 (36602) 140-140

E-Mail: vertrieb@dietzel-hydraulik.de

Order no.	DN in mm	flange in inch	C in mm	min. D in mm	E±3 in mm	B±3 in mm	L±3 in mm
7.471-32-32	51	2	79,4	40,0	140	133	224

Dietzel Hydraulik GmbH
Leedenstraße 10
04626 Löbichau

Tel.: +49 (36602) 140-140

E-Mail: vertrieb@dietzel-hydraulik.de

Pressure fittings

4SH SKIVE (740)

Updated at:
24.05.2022

Application
SKIVE 4SH / R15 press holder for dH7000 4SH / R15 flexible tubes

Material
Steel

Surface protection
Zinc-electroplated

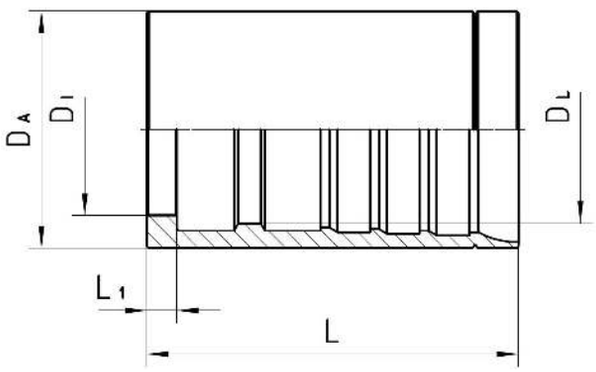

Order no.	DN in mm	DA in mm	DI in mm	DL in mm	L in mm	L1 in mm
740-10	16	34,0	23,6	26,0	50,0	3,8
740-12	19	38,0	27,6	30,0	60,0	4,8
740-16	25	46,0	33,0	36,1	71,5	5,7
740-20	31	56,9	40,8	43,4	87,0	6,2
740-24	38	65,8	48,5	50,3	95,0	6,2
740-32	51	80,7	61,0	64,7	100,2	6,2

Dietzel Hydraulik GmbH
Leedenstraße 10
04626 Löbichau

Tel.: +49 (36602) 140-140

E-Mail: vertrieb@dietzel-hydraulik.de

Pressure fittings

R15 SKIVE (760)

Updated at:
24.05.2022

Application
SKIVE 4SH / R15 press holder for dH7000 4SH / R15 flexible tubes

Material
Steel

Surface protection
Zinc-electroplated

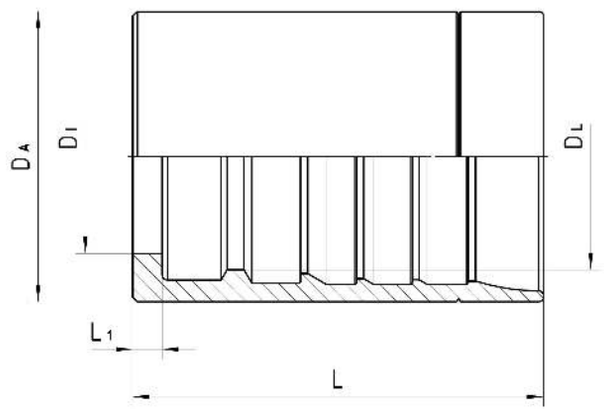

Order no.	DN in mm	DA in mm	DI in mm	DL in mm	L in mm	L1 in mm
740-12	19	38,0	27,6	30,0	60,0	4,8
740-16	25	46,0	33,0	36,1	71,5	5,7
760-20	31	61,0	40,8	47,6	87,0	6,2
760-24	38	70,0	49,0	54.5	95,0	6,2

Dietzel Hydraulik GmbH
Leedenstraße 10
04626 Löbichau

Tel.: +49 (36602) 140-140

E-Mail: vertrieb@dietzel-hydraulik.de

Pressure fittings

R13 SKIVE (760)

Updated at:
24.05.2022

Application
SKIVE R13 press holder for dH7000 R13 flexible tubes

Material
Steel

Surface protection
Zinc-electroplated

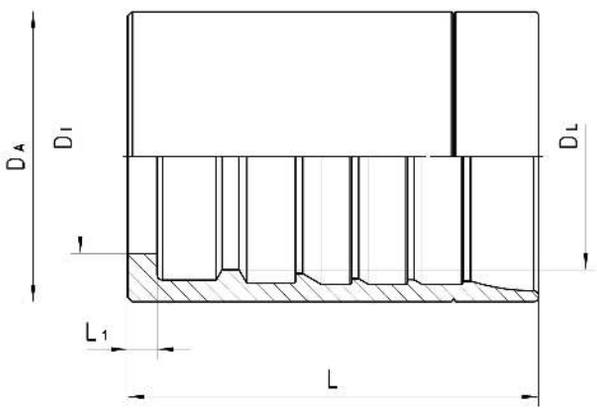

Order no.	DN in mm	DA in mm	DI in mm	DL in mm	L in mm	L1 in mm
760-32	51	85,0	61,0	69,0	100,2	6,2

Dietzel Hydraulik GmbH
Leedenstraße 10
04626 Löbichau

Tel.: +49 (36602) 140-140

E-Mail: vertrieb@dietzel-hydraulik.de

Pressure fittings

DKOS straight

Updated at:
24.05.2022

Connection
Sealing head 24° outside cone O-ring sealing with metric nut S series

Standard
ISO 8434-1

Application
560 bar flexible tubes

Material
Steel

Surface protection
Zinc-electroplated

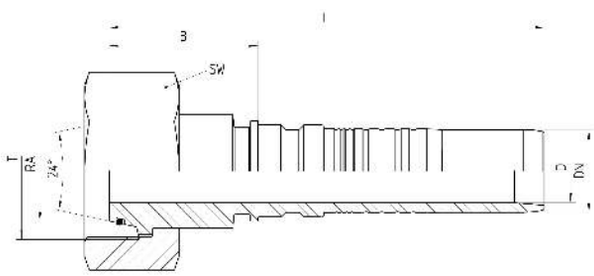

Order no.	DN in mm	RA	T	SW in mm	min. D in mm	B±3 in mm	L±3 in mm	working pressure in bar
8.881-12-12	19	25 S	M 36x2.0	46	14	40	111	560
8.881-16-16	25	30 S	M 42x2.0	55	19	45	133	560
8.881-20-16	25	38 S	M 52x2.0	65	19	56	144	525
8.881-20-20	31	38 S	M 52x2.0	65	24	57	166	525

Dietzel Hydraulik GmbH
Leedenstraße 10
04626 Löbichau

Tel.: +49 (36602) 140-140

E-Mail: vertrieb@dietzel-hydraulik.de

Pressure fittings

DKOS 45°

Updated at:
24.05.2022

Connection
Sealing head 24° outside cone O-ring sealing with metric nut S series

Standard
ISO 8434-1

Application
560 bar flexible tubes

Material
Steel

Surface protection
Zinc-electroplated

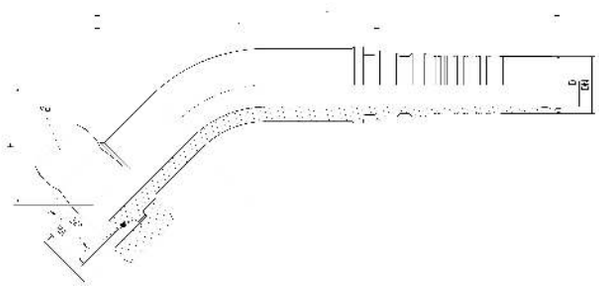

Order no.	DN in mm	RA	T	SW in mm	min. D in mm	E±3 in mm	B±3 in mm	L±3 in mm	working pressure in bar
8.885-12-12	19	25 S	M 36x2	46	14,0	40	92	163	560
8.885-16-16	25	30 S	M 42x2	55	19,0	69	141	230	560
8.885-20-20	31	38 S	M 52x2	65	24,0	61	134	233	523

Dietzel Hydraulik GmbH
Leedenstraße 10
04626 Löbichau

Tel.: +49 (36602) 140-140

E-Mail: vertrieb@dietzel-hydraulik.de

Pressure fittings

DKOS 90°

Updated at:
24.05.2022

Connection
Sealing head 24° outside cone O-ring sealing with metric nut S series

Standard
ISO 8434-1

Application
560 bar flexible tubes

Material
Steel

Surface protection
Zinc-electroplated

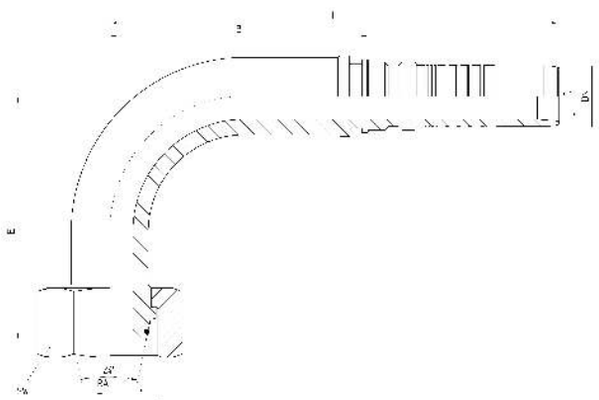

Order no.	DN in mm	RA	T	SW in mm	min. D in mm	E±3 in mm	B±3 in mm	L±3 in mm	working pressure in bar
8.889-12-12	19	25 S	M 36x2	46	14,0	76	77	148	560
8.889-16-16	25	30 S	M 42x2	55	19,0	122	109	197	560
8.889-20-20	31	38 S	M 52x2	65	24,0	131	135	234	525

Dietzel Hydraulik GmbH
Leedenstraße 10
04626 Löbichau

Tel.: +49 (36602) 140-140

E-Mail: vertrieb@dietzel-hydraulik.de

Pressure fittings

SFS straight

Updated at:
24.05.2022

Connection
SAE flange 6000 PSI (S series)

Standard
ISO 6162-2

Application
560 bar flexible tubes

Material
Steel

Surface protection
Zinc-electroplated

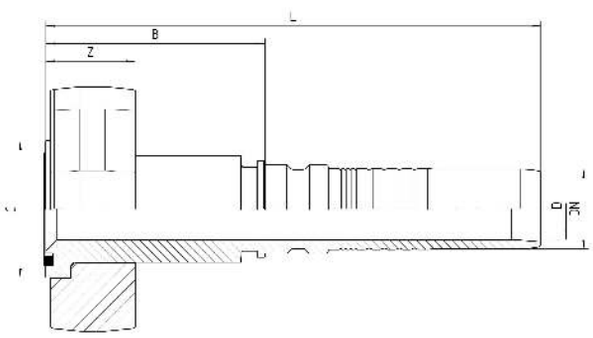

Order no.	DN in mm	Flange in inch	C in mm	min. D in mm	B±3 in mm	L±3 in mm	Z in mm	S1 in mm	S2 in mm	T1 in mm	T2 in mm	cheese-head screw 4x DIN EN ISO 4762 12.9	Kantseal ring 90 Shore
8.821-12-12	19	3/4	41,3	14,0	71,0	142	28,5 ± 0,2	23,8	50,80	62,0 +0,9 -0,5	73,0 +0,9 -0,5	M 10x45	24,99x3,40
8.821-16-12	19	1	48,0	14,0	71,0	142	28,5 ± 0,2	27,8	57,22	73,5 +0,9 -0,5	82,5 +0,9 -0,5	M 12x50	32,92x3,40
8.821-16-16	25	1	48,0	19,0	79,0	167	28,5 ± 0,2	27,8	57,22	73,5 +0,9 -0,5	82,5 +0,9 -0,5	M 12x50	32,92x3,40
8.821-20-16	25	1 1/4	54,0	19,0	56,6	145	35,5 ± 0,3	31,8	66,70	83,5 +1,1 -0,5	96,5 +1,1 -0,5	M 12x50	32,92x3,40

Dietzel Hydraulik GmbH
Leedenstraße 10
04626 Löbichau

Tel.: +49 (36602) 140-140

E-Mail: vertrieb@dietzel-hydraulik.de

Order no.	DN in mm	Flange in inch	C in mm	min. D in mm	B±3 in mm	L±3 in mm	Z in mm	S1 in mm	S2 in mm	T1 in mm	T2 in mm	cheese-head screw 4x DIN EN ISO 4762 12.9	Kantseal ring 90 Shore
8.821-20-2(	31	1 1/4	54,0	24,0	96,9	196	35,5 ± 0,3	31,8	66,72	83,5 +1,1 -0,5	96,5 +1,1 -0,5	M 14x55	37,69x3,40

Dietzel Hydraulik GmbH
Leedenstraße 10
04626 Löbichau

Tel.: +49 (36602) 140-140

E-Mail: vertrieb@dietzel-hydraulik.de

Pressure fittings

SFS 45°

Updated at:
24.05.2022

Connection
SAE flange 6000 PSI (S series)

Standard
ISO 6162-2

Application
560 bar flexible tubes

Material
Steel

Surface protection
Zinc-electroplated

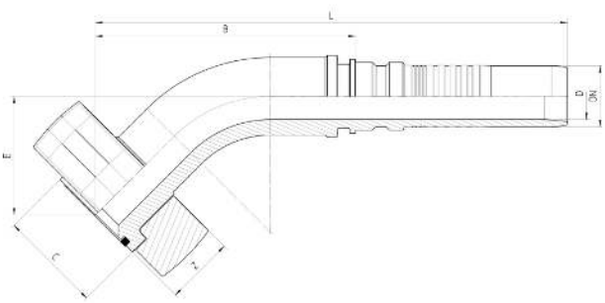

Order no.	DN in mm	Flange in inch	C in mm	min. D in mm	E±3 in mm	B±3 in mm	L±3 in mm	Z in mm	S1 in mm	S2 in mm	T1 in mm	T2 in mm	cheese-head screw 4x DIN EN ISO 4762 12.9	Kantseal ring 90 Shore
8.851-12-	19	3/4	41,3	14,0	37	93	163	28,5 ± 0,2	23,8	50,80	62,0 +0,9 -0,5	73,0 +0,9 -0,5	M10x45	24,99x3,40
8.851-16-	19	1	48,0	14,0	38	93	164	28,5 ± 0,2	27,8	57,22	73,5 +0,9 -0,5	82,5 +0,9 -0,5	M12x50	32,99x3,40
8.851-16-	25	1	48,0	19,0	46	134	222	28,5 ± 0,2	27,8	57,22	73,5 +0,9 -0,5	82,5 +0,9 -0,5	M12x50	32,99x3,40

Dietzel Hydraulik GmbH
Leedenstraße 10
04626 Löbichau

Tel.: +49 (36602) 140-140

E-Mail: vertrieb@dietzel-hydraulik.de

Order no.	DN in mm	Flange in inch	C in mm	min. D in mm	E±3 in mm	B±3 in mm	L±3 in mm	Z in mm	S1 in mm	S2 in mm	T1 in mm	T2 in mm	cheese-head screw 4x DIN EN ISO 4762 12.9	Kantseal ring 90 Shore
8.851-20-	25	1 1/4	54,0	19,0	51	137	225	35,5 ± 0,3	31,8	66,70	83,5 +1,1 -0,5	96,5 +1,1 -0,5	M14x55	37,69x3,40
8.851-20-	31	1 1/4	54,0	24,0	61	134	243	35,5 ± 0,3	31,8	66,70	83,5 +1,1 -0,5	96,5 +1,1 -0,5	M14x55	37,69x3,40

Dietzel Hydraulik GmbH
Leedenstraße 10
04626 Löbichau

Tel.: +49 (36602) 140-140

E-Mail: vertrieb@dietzel-hydraulik.de

Pressure fittings

SFS 90°

Updated at:
24.05.2022

Connection
SAE flange 6000 PSI (S series)

Standard
ISO 6162-2

Application
560 bar flexible tubes

Material
Steel

Surface protection
Zinc-electroplated

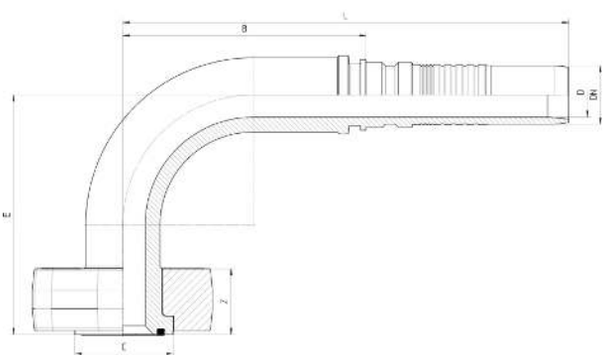

Order no.	DN in mm	Flange in inch	C in mm	min. D in mm	E±3 in mm	B±3 in mm	L±3 in mm	Z in mm	S1 in mm	S2 in mm	T1 in mm	T2 in mm	cheese-head screw 4x DIN EN ISO 4762 12.9	Kantseal ring 90 Shore
8.871-12-	19	3/4	41,3	14,0	76	77	148	28,5 ± 0,2	23,8	50,8	62,0 +0,9 -0,5	73,0 +0,9 -0,5	M10x45	24,99x3,40
8.871-16-	19	1	48,0	14,0	75	77	148	28,5 ± 0,2	27,8	57,22	73,5 +0,9 -0,5	82,5 +0,9 -0,5	M12x50	23,99x3,40
8.871-16-	25	1	48,0	19,0	93	118	207	28,5 ± 0,2	27,8	57,22	73,5 +0,9 -0,5	82,5 +0,9 -0,5	M12x50	32,99x3,40

Dietzel Hydraulik GmbH
Leedenstraße 10
04626 Löbichau

Tel.: +49 (36602) 140-140

E-Mail: vertrieb@dietzel-hydraulik.de

Order no.	DN in mm	Flange in inch	C in mm	min. D in mm	E±3 in mm	B±3 in mm	L±3 in mm	Z in mm	S1 in mm	S2 in mm	T1 in mm	T2 in mm	cheese-head screw 4x DIN EN ISO 4762 12.9	Kantseal ring 90 Shore
8.871-20-	25	1 1/4	54,0	19,0	100	115	203	35,5 ± 0,3	31,8	66,7	83,5 +1,1 -0,5	96,5 +1,1 -0,5	M14x55	37,69x3,40
8.871-20-	31	1 1/4	54,0	24,0	129	131	240	35,5 ± 0,3	31,8	66,7	83,5 +1,1 -0,5	96,5 +1,1 -0,5	M14x55	37,69x3,40

Dietzel Hydraulik GmbH
Leedenstraße 10
04626 Löbichau

Tel.: +49 (36602) 140-140

E-Mail: vertrieb@dietzel-hydraulik.de

Pressure fittings

SAE 3000 PSI flange half

Updated at:
24.05.2022

Material
Steel

Surface protection
Zinc-electroplated

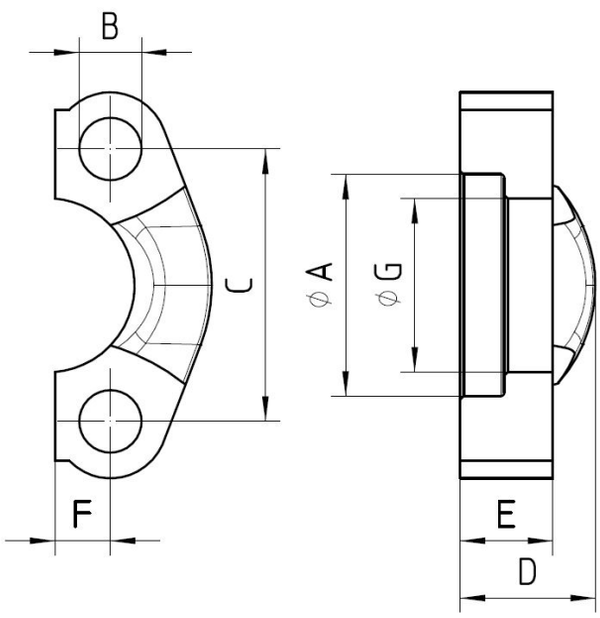

Order no.	old Order no.	SAE-size in inch	A in mm	G in mm	B in mm	C in mm	D in mm	E in mm	strength class in mm	for bolt
480-001	480- 8	1/2	31,0	24,3	8,7	38,1	19	13	8,8	M 8x25
480-003	480-12	3/4	38,9	32,1	11,1	47,6	22	14	10,8	M 10x30
480-006	480-16	1	45,2	38,5	13,1	52,4	24	16	10,8	M 10x30
480-008	480-20	1 1/4	51,6	43,7	15,1	58,7	22	16	12,0	M 10x35
480-010	480-20-I	1 1/4	51,6	43,7	15,1	58,7	22	16	10,5	M 10x35
480-011	480-20-II	1 1/4	51,6	43,7	15,1	58,7	22	16	12,5	M 12x35
480-012	480-24	1 1/2	61,1	50,8	17,9	69,9	25	16	13,5	M 12x35
480-014	480-32	2	72,2	62,7	21,4	77,8	26	16	13,5	M 12x35

Dietzel Hydraulik GmbH
Leedenstraße 10
04626 Löbichau

Tel.: +49 (36602) 140-140

E-Mail: vertrieb@dietzel-hydraulik.de

Order no.	old Order no.	SAE-size in inch	A in mm	G in mm	B in mm	C in mm	D in mm	E in mm	strength class in mm	for bolt
480-016	480-40	2 1/2	84,9	74,9	25,4	88,9	38	19	13,5	M 12x40
480-019	480-48	3	102,4	90,9	31,0	106,4	41	22	17,0	M 16x45
480-022	480-56	3 1/2	115,1	102,4	34,9	120,6	28	22	17,0	M 16x45
480-024	480-64	4	127,8	115,1	38,9	130,2	35	25	17,0	M 16x50
480-026	480-80	5	153,2	140,5	46,0	152,4	41	28	17,0	M 16x50

Dietzel Hydraulik GmbH
Leedenstraße 10
04626 Löbichau

Tel.: +49 (36602) 140-140

E-Mail: vertrieb@dietzel-hydraulik.de

Pressure fittings

SAE 3000 PSI solid flange

Updated at:
24.05.2022

Material
Steel

Surface protection
Zinc-electroplated

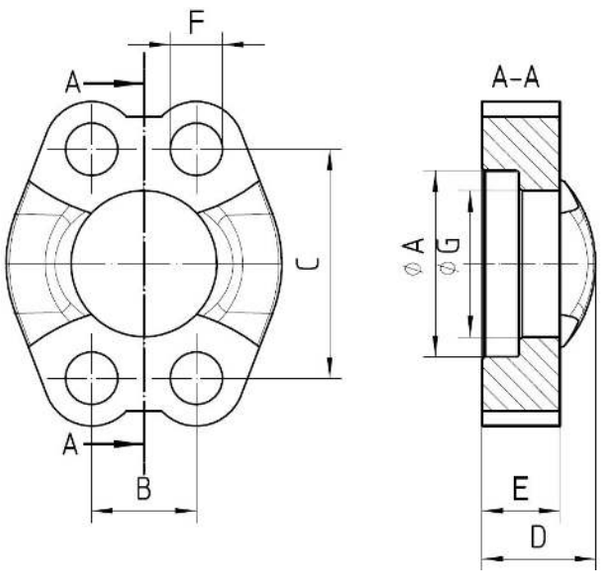

Order no.	old Order no.	SAE-size in inch	A in mm	G in mm	B in mm	C in mm	D in mm	E in mm	strength class in mm	for bolt
490-001	490- 8	1/2	31,0	24,3	17,5	38,1	19	13	8,8	M 8x25
490-003	490-12	3/4	38,9	32,1	22,2	47,6	22	14	10,8	M 10x30
490-005	490-16	1	45,2	38,5	26,2	52,4	24	16	10,8	M 10x35
490-007	490-16 S	1	45,2	38,5	26,2	52,4	26	26	10,8	M 10x45
490-008	490-20	1 1/4	51,6	43,7	30,2	58,7	22	16	12,0	M 10x35
490-010	490-20 S	1 1/4	51,6	43,7	30,2	58,7	33	24	13,0	M 12x45
490-011	490-24	1 1/2	61,1	50,8	35,7	69,9	25	16	13,5	M 12x35
490-013	490-24 S	1 1/2	61,1	50,8	35,7	69,9	37	27	13,5	M 12x50
490-014	490-32	2	72,2	62,7	42,9	77,8	26	16	13,5	M 12x35

Dietzel Hydraulik GmbH
Leedenstraße 10
04626 Löbichau

Tel.: +49 (36602) 140-140

E-Mail: vertrieb@dietzel-hydraulik.de

Order no.	old Order no.	SAE-size in inch	A in mm	G in mm	B in mm	C in mm	D in mm	E in mm	strength class in mm	for bolt
490-017	490-32 S	2	72,2	62,7	42,9	77,8	43	30	13,5	M 12x50
490-018	490-40	2 1/2	84,9	74,9	50,8	88,9	38	19	13,5	M 12x40
490-020	490-48	3	102,4	90,9	61,9	106,4	41	22	16,8	M 16x45
490-023	490-56	3 1/2	115,1	102,4	69,8	120,6	28	22	17,0	M 16x45
490-025	490-64	4	127,8	115,1	77,8	130,2	35	25	17,0	M 16x50
490-027	490-80	5	153,2	140,5	92,1	152,4	41	28	17,0	M 16x50

Dietzel Hydraulik GmbH
Leedenstraße 10
04626 Löbichau

Tel.: +49 (36602) 140-140

E-Mail: vertrieb@dietzel-hydraulik.de

Pressure fittings

SAE 3000 PSI mating solid flange

Updated at:
24.05.2022

Material
Steel

Surface protection
Zinc-electroplated

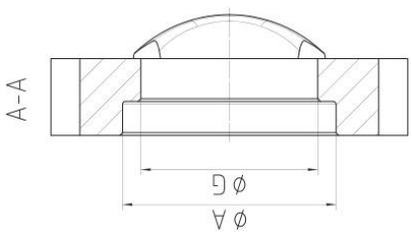

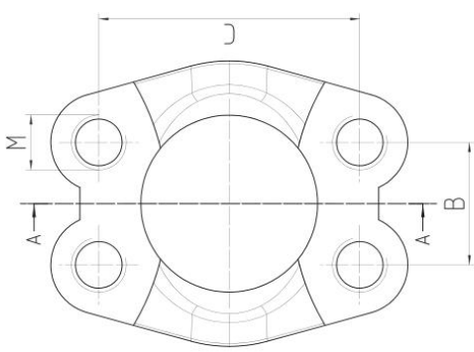

Order no.	old Order no.	SAE-size in inch	A in mm	G in mm	B in mm	C in mm	D in mm	E in mm	M in mm
490-029	490G-08	1/2	31,0	24,3	17,5	38,1	19	13	M 8

Dietzel Hydraulik GmbH
Leedenstraße 10
04626 Löbichau

Tel.: +49 (36602) 140-140

E-Mail: vertrieb@dietzel-hydraulik.de

Order no.	old Order no.	SAE-size in inch	A in mm	G in mm	B in mm	C in mm	D in mm	E in mm	M in mm
490-030	490G-12	3/4	38,9	32,1	22,2	47,6	22	14	M10
490-031	490G-16	1	45,2	38,5	26,2	52,4	24	16	M10
490-032	490G-20	1 1/4	51,6	43,7	30,2	58,7	22	14	M10
490-033	490G-24	11/2	61,1	50,8	35,7	69,9	25	16	M12
490-034	490G-32	2	72,2	62,7	42,9	77,8	26	16	M12
490-035	490G-40	2 1/2	84,9	74,9	50,8	88,9	38	19	M12
490-036	490G-48	3	102,4	90,9	61,9	106,4	41	22	M16
490-037	490G-56	3 1/2	115,1	102,4	69,8	120,6	28	22	M16
490-038	490G-64	4	127,8	115,1	77,8	130,2	35	25	M16
490-039	490G-80	5	153,2	140,5	92,1	152,4	41	28	M16

Dietzel Hydraulik GmbH
Leedenstraße 10
04626 Löbichau

Tel.: +49 (36602) 140-140

E-Mail: vertrieb@dietzel-hydraulik.de

Pressure fittings

SAE 6000 PSI flange half

Updated at:
24.05.2022

Material
Steel

Surface protection
Zinc-electroplated

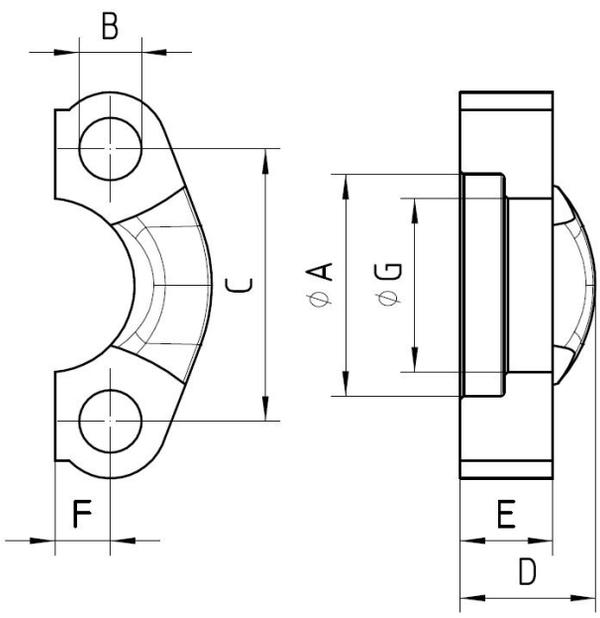

Order no.	old Order no.	SAE-size in inch	A in mm	G in mm	B in mm	C in mm	D in mm	E in mm	F in mm	for bolt UNC
481-001	481- 8	1/2	32,5	24,6	9,2	40,5	22	16	8,8	M 8x30
481-003	481-12	3/4	42,1	32,5	11,9	50,8	28	19	11,0	M 10x35
481-005	481-16	1	48,4	38,9	13,9	57,2	33	24	13,0	M 12x45
481-007	481-16-I	1	48,4	38,9	13,9	57,2	33	24	12,0	(7/16 - 1 3/4)
481-008	481-20	1 1/4	54,8	44,5	15,9	66,7	38	27	15,0	M 14x50
481-010	481-20-I	1 1/4	54,8	44,5	15,9	66,7	38	27	13,5	(1/2 - 1 3/4)
481-011	481-24	1 1/2	64,3	51,6	18,3	79,4	43	30	17,0	M 16x55
481-013	481-32	2	80,2	67,6	22,2	96,8	52	37	21,0	M 20x65

Dietzel Hydraulik GmbH
Leedenstraße 10
04626 Löbichau

Tel.: +49 (36602) 140-140

E-Mail: vertrieb@dietzel-hydraulik.de

Pressure fittings

SAE 6000 PSI solid flange

Updated at:
24.05.2022

Material
Steel

Surface protection
Zinc-electroplated

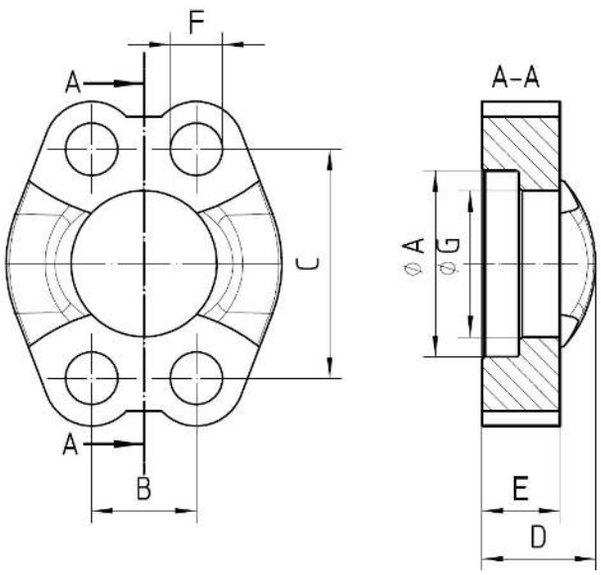

Order no.	old Order no.	SAE-size in inch	A in mm	G in mm	B in mm	C in mm	D in mm	E in mm	F in mm	for bolt UNC
491-001	491- 8	1/2	32,5	24,6	18,2	40,5	22	16	8,8	M 8x30
491-004	491-12	3/4	42,1	32,5	23,8	50,8	28	19	11,0	M 10x35
491-006	491-16	1	48,4	38,9	27,8	57,2	33	24	13,0	M 12x45
491-008	491-16-I	1	48,4	38,9	27,8	57,2	33	24	12,0	(7/16 - 1 3/4)
491-009	491-20	1 1/4	54,8	44,5	31,8	66,7	38	27	15,0	M 14x50
491-011	491-24	1 1/2	64,3	51,6	36,5	79,4	43	30	17,0	M 16x55
491-013	491-32	2	80,2	67,6	44,5	96,8	52	37	21,0	M 20x65

Dietzel Hydraulik GmbH
Leedenstraße 10
04626 Löbichau

Tel.: +49 (36602) 140-140

E-Mail: vertrieb@dietzel-hydraulik.de

Pressure fittings

SAE 6000 PSI mating solid flange

Updated at:
24.05.2022

Material
Steel

Surface protection
Zinc-electroplated

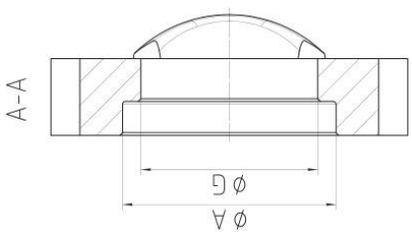

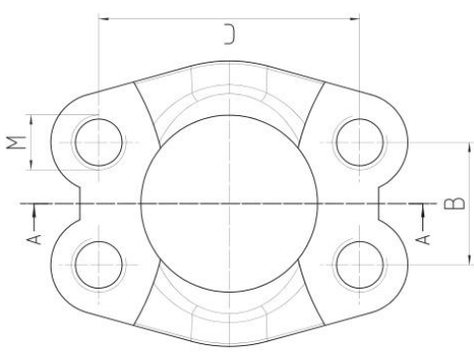

Order no.	Old-item	SAE-size in inch	A in mm	G in mm	B in mm	C in mm	D in mm	E in mm	M in mm
491-018	491G-08	1/2	32,5	24,6	18,2	40,5	22	16	M 8

Dietzel Hydraulik GmbH
Leedenstraße 10
04626 Löbichau

Tel.: +49 (36602) 140-140

E-Mail: vertrieb@dietzel-hydraulik.de

Order no.	Old-item	SAE-size in inch	A in mm	G in mm	B in mm	C in mm	D in mm	E in mm	M in mm
491-019	491G-12	3/4	42,1	32,5	23,8	50,8	28	19	M10
491-020	491G-16	1	48,4	38,9	27,8	57,2	33	24	M12
491-021	491G-20	1 1/4	54,8	44,5	31,8	66,7	38	27	M14
491-022	491G-24	1 1/2	64,3	51,6	36,5	79,4	43	30	M16
491-023	491G-32	2	80,2	67,6	44,5	96,8	52	37	M20
491-024	491G-40	2 1/2	108,9	90,0	58,8	123,8	45	45	M24

Dietzel Hydraulik GmbH
Leedenstraße 10
04626 Löbichau

Tel.: +49 (36602) 140-140

E-Mail: vertrieb@dietzel-hydraulik.de

Pressure fittings

O-ring DKOL/DKOS

Updated at:
24.05.2022

Application
for DKOL / DKOS

Material
NBR 70 Shore (Perbunan)

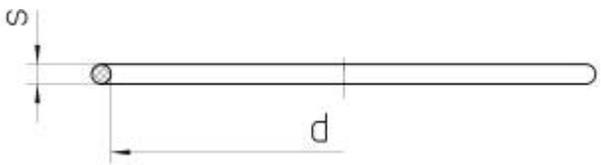

Order no.	RA	d1 x d2 in mm
OR004-006	6L/S	4,5 x 1,5
OR006-006	8L/S	6,5 x 1,5
OR009-001	10L/S	9,0 x 1,5
OR011-001	12L/S	11,0 x 1,5
OR012-001	14S	12,0 x 2,0

Dietzel Hydraulik GmbH
Leedenstraße 10
04626 Löbichau

Tel.: +49 (36602) 140-140

E-Mail: vertrieb@dietzel-hydraulik.de

Order no.	RA	d1 x d2 in mm
OR012-001	15L	12,0 x 2,0
OR014-001	16S	14,0 x 2,0
OR015-001	18L	15,0 x 2,0
OR016-004	20S	16,3 x 2,4
OR020-001	22L	20,0 x 2,0
OR022-004	25S	22,3 x 2,4
OR025-004	30S	25,3 x 2,4
OR026-001	28L	26,0 x 2,0
OR032-004	35L	32,0 x 2,5
OR033-004	38S	33,3 x 2,4
OR038-001	42L	38,0 x 2,5
OR046-001	50S	46,0 x 3,0

Dietzel Hydraulik GmbH
Leedenstraße 10
04626 Löbichau

Tel.: +49 (36602) 140-140

E-Mail: vertrieb@dietzel-hydraulik.de

Pressure fittings

O-ring SAE flange

Updated at:
24.05.2022

Application
for 3000 and 6000 PSI SAE flange // 9000PSI CAT flanges

Material
NBR 90 Shore (Perbunan)

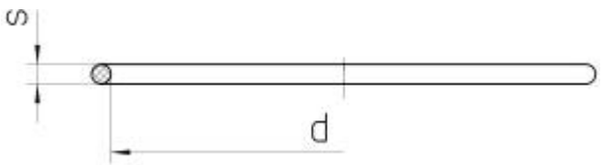

Order no.	DN SAE-Flange	d x s in mm
OR018-004	1/2	18,64 x 3,53
OR024-001	3/4	24,99 x 3,53
OR032-006	1	32,92 x 3,53
OR037-001	1 1/4	37,69 x 3,53
OR047-002	1 1/2	47,22 x 3,53

Dietzel Hydraulik GmbH
Leedenstraße 10
04626 Löbichau

Tel.: +49 (36602) 140-140

E-Mail: vertrieb@dietzel-hydraulik.de

Order no.	DN SAE-Flange	d x s in mm
OR056-004	2	56,74 x 3,53
OR069-003	2 1/2	69,44 x 3,53
OR085-002	3	85,32 x 3,53
OR098-003	3 1/2	98,02 x 3,53
OR110-005	4	110,72 x 3,53
OR136-001	5	136,12 x 3,53

Dietzel Hydraulik GmbH
Leedenstraße 10
04626 Löbichau

Tel.: +49 (36602) 140-140

E-Mail: vertrieb@dietzel-hydraulik.de

Pressure fittings

O-ring DIN flange

Updated at:
24.05.2022

Application
for DIN flange with O-ring

Material
NBR 70 Shore (Perbunan)

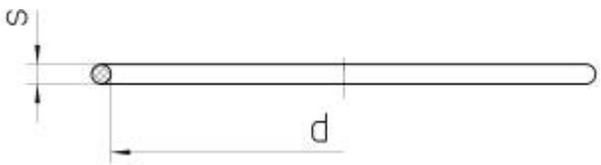

Order no.	DN DIN-Flange in mm	d1 x d2 in mm
OR034-001	20	34,00 x 3,00
OR044-001	25	44,00 x 3,00
OR047-001	32	47,00 x 5,33
OR056-002	40	56,52 x 5,33
OR069-001	50	69,22 x 5,33

Dietzel Hydraulik GmbH
Leedenstraße 10
04626 Löbichau

Tel.: +49 (36602) 140-140

E-Mail: vertrieb@dietzel-hydraulik.de

Order no.	DN DIN-Flange in mm	d1 x d2 in mm
OR088-003	65	88,27 x 5,33
OR110-002	80	110,49 x 5,33
OR132-001	100	132,72 x 6,99
OR158-001	125	158,12 x 6,99
OR183-001	150	183,52 x 6,99
OR228-001	200	228,00 x 7,00

Dietzel Hydraulik GmbH
Leedenstraße 10
04626 Löbichau

Tel.: +49 (36602) 140-140

E-Mail: vertrieb@dietzel-hydraulik.de

Pressure fittings

O-ring ORS

Updated at:
24.05.2022

Application
for ORS

Material
NBR 90 Shore (Perbunan)

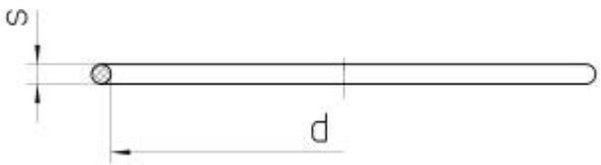

Order no.	DN in mm	for T in UNF/UNS	d1 x d2 in mm
OR007-007	06	9/16-18	O 07,65 x 1,78
OR009-006	10	11/16-16	O 09,25 x 1,78
OR012-004	12	13/16-16	O 12,42 x 1,78
OR015-006	16	1-14	O 15,6 x 1,78
OR018-010	19	1 3/16-12	O 18,77 x 1,78

Dietzel Hydraulik GmbH
Leedenstraße 10
04626 Löbichau

Tel.: +49 (36602) 140-140

E-Mail: vertrieb@dietzel-hydraulik.de

Order no.	DN in mm	for T in UNF/UNS	d1 x d2 in mm
OR023-009	25	1 7/16-12	O 23,52 x 1,78
OR029-007	31	1 11/16-12	O 29,87 x 1,78
OR037-006	38	2-12	O 37,82 x 1,78

Dietzel Hydraulik GmbH
Leedenstraße 10
04626 Löbichau

Tel.: +49 (36602) 140-140

E-Mail: vertrieb@dietzel-hydraulik.de

Pressure fittings

O-ring DKOR

Updated at:
24.05.2022

Application
for DKOR

Material
NBR 70 Shore (Perbunan)

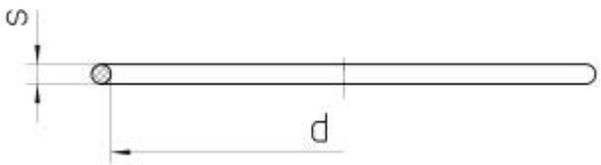

Order no.	DN in mm	for T in inch	d1 x ds in mm
OR008-002	10	3/8	8,1 x 1,6-70
OR012-006	12	1/2	12,1 x 1,6 -70
OR013-007	16	5/8	13,1 x 1,6 -70
OR017-004	19	3/4	17,1 x 1,6 -70
OR022-006	25	1	22,1 x 1,6 -70

Dietzel Hydraulik GmbH
Leedenstraße 10
04626 Löbichau

Tel.: +49 (36602) 140-140

E-Mail: vertrieb@dietzel-hydraulik.de

Order no.	DN in mm	for T in inch	d1 x ds in mm
OR029-004	31	1 1/4	29,1 x 1,6 -70
OR035-002	38	1 1/2	35,1 x 1,6 -70
OR047-004	51	2	47,35 x 1,78 -70
OR057-006	60	2 1/2	56,87 x 1,78 -70
OR069-005	76	3	69,57 x 1,78 -70

Dietzel Hydraulik GmbH
Leedenstraße 10
04626 Löbichau

Tel.: +49 (36602) 140-140

E-Mail: vertrieb@dietzel-hydraulik.de

Pressure fittings

O-ring DIN2690 flat gasket

Updated at:
24.05.2022

Application
for welding neck flanges as DIN2632 PN10, DIN2434 PN25, DIN2635 PN40

Material
Hecker Centellen WS 3820

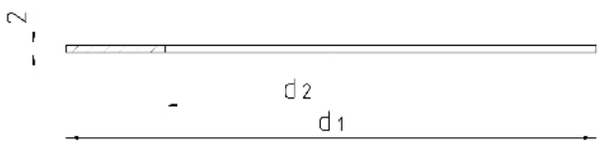

Order no.	DN in mm	nominal pressure PN	d1 in mm	d2 in mm
FD020-001	20	10 / 40	60	28
FD025-001	25	10 / 40	70	35
FD032-001	32	10 / 40	82	43
FD040-001	40	10 / 40	92	49
FD050-002	50	10 / 40	107	61

Dietzel Hydraulik GmbH
Leedenstraße 10
04626 Löbichau

Tel.: +49 (36602) 140-140

E-Mail: vertrieb@dietzel-hydraulik.de

Order no.	DN in mm	nominal pressure PN	d1 in mm	d2 in mm
FD065-001	65	10 / 40	127	77
FD080-001	80	10 / 40	142	90
FD100-002	100	10 / 16	162	115
FD125-001	125	10 / 16	192	141
FD150-002	150	10 / 16	218	169
FD200-001	200	10 / 16	273	220

Note
no-asbestos,water-proof, vapour-proof, oil-proof, and gas-proof ; up to 250 °C DIN-DVGW 90.01e103

Dietzel Hydraulik GmbH
Leedenstraße 10
04626 Löbichau

Tel.: +49 (36602) 140-140

E-Mail: vertrieb@dietzel-hydraulik.de

Pressure fittings

Chesse head screws

Updated at:
24.05.2022

Standard
DIN EN ISO 4762

Material
Steel

Surface protection
Material grade 8.8: Zinc-electroplated / material grade 10.9 bare, slightly oiled

Order no.	for SAE-Flange 3000 PSI inch	for SAE-Flange 3000 PSI inch	for SAE-Flange 6000 PSI inch	for SAE-Flange cone 3000	for SAE-Flange cone 6000	SAE-weld-on cone flange AKO	SAE-weld-on cone flange AK1	d x l steel grade in mm	s in mm
N08-007	1/2							M 8x25 \n \n 8.8	6
N08-009			1/2					M 8x30 \n \n 8.8	6
N08-016						1/2	1/2	M 8x45 \n \n 10.9	6
N10-009	3/4	1						M 10x30 \n \n 8.8	8
N10-012	1 1/4		3/4					M 10x35 \n \n 8.8	8
N10-018				3/4	3/4			M 10x45 \n \n 10.9	8
N10-019				1		3/4, 1	3/4	M 10x50 \n \n 10.9	8
N10-021				1 1/4		1 1/4		M 10x55 \n \n 10.9	8
N12-005	1 1/2	2						M 12x35 \n \n 8.8	10
N12-012	2 1/2							M 12x40 \n \n 8.8	10
N12-014			1					M 12x45 \n \n 8.8	10
N12-020				1 1/4	1		1	M 12x55 \n \n 10.9	10
N12-024				1 1/2		1 1/2		M 12x65 \n \n 10.9	10
N12-025				2		2		M 12x70 \n \n 10.9	10
N14-004			1 1/4					M 14x50 \n \n 8.8	12
N14-008					1 1/4		1 1/4	M 14x55 \n \n 10.9	12
N16-005	3	3 1/2						M 16x45 \n \n 8.8	14
N16-008	4	5						M 16x50 \n \n 8.8	14
N16-010			1 1/2					M 16x55 \n \n 8.8	14
N16-017					1 1/2			M 16x65 \n \n 10.9	14

Dietzel Hydraulik GmbH
Leedenstraße 10
04626 Löbichau

Tel.: +49 (36602) 140-140

E-Mail: vertrieb@dietzel-hydraulik.de

Order no.	for SAE-Flange 3000 PSI inch	for SAE-Flange 3000 PSI inch	for SAE-Flange 6000 PSI inch	for SAE-Flange cone 3000	for SAE-Flange cone 6000	SAE-weld-on cone flange AKO	SAE-weld-on cone flange AK1	d x l steel grade in mm	s in mm
N16-022							1 1/2	M 16x70 \n \n 10.9	14
N20-004			2					M 20x65 \n \n 8.8	17
N20-009					2		2	M 20x80 \n \n 10.9	17

Note
with hexagon socket as per DIN EN ISO 4762

Dietzel Hydraulik GmbH
Leedenstraße 10
04626 Löbichau

Tel.: +49 (36602) 140-140

E-Mail: vertrieb@dietzel-hydraulik.de

Pressure fittings

Hexagon bolts and nuts

Updated at:
24.05.2022

Material
Steel

Order no.	DN flange	hexagon bolt fixed flange coupling	.	Order-No.	hexagon nuts	.	Order No.	usage of ring washers for
N12-002	20			N-121	M12		N-173	M12
N12-011	20							
N12-018	20	M12x50						
N12-002	25			N-121	M12		N-173	M12
N12-018	25	M12x50						
N16-037	32			N-125	M16		N-177	M16
N16-007	32	M16x50						
N16-037	40			N-125	M16		N-177	M16
N16-007	40	M16x50						
N16-003	50			N-125	M16		N-177	M16
N16-047	50	M16x55						
N16-003	65			N-125	M16		N-177	M16
N16-013	65	M16x60						
N16-003	80			N-125	M16		N-177	M16
N16-013	80	M16x60						
N16-003	100			N-125	M16		N-177	M16
N16-013	100	M16x60						
N16-003	125			N-125	M16		N-177	M16
N16-013	125	M16x60						
N20-030	150			N-127	M20		N-127	M20
N20-031	150	M16x60						
N20-030	200			N-127	M20		N-127	M20
N20-005	200	M20x70						
N24-013	250			N-129	M24		N-129	M24
N24-004	250	M24x80						
N24-014	300			N-129	M24		N-129	M24
N24-005	300	M24x80						
N24-014	350			N-129	M24		N-129	M24
N24-005	350	M24x90						

Dietzel Hydraulik GmbH
Leedenstraße 10
04626 Löbichau

Tel.: +49 (36602) 140-140

E-Mail: vertrieb@dietzel-hydraulik.de

Pressure fittings

Seamless 90° pipe bends

Updated at:
24.05.2022

Material
Steel

Surface protection
phospated

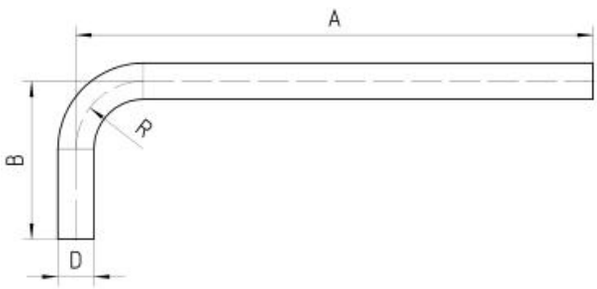

Order no.	D in mm	min. bending radiusR	A±3 in mm	B±3 in mm
90 1215 230 70	12 x 1,5	30	230	70
90 1220 230 70	12 x 2,0	30	230	70
90 1420 230 70	14 x 2,0	30	230	70
90 1515 230 70	15 x 1,5	30	230	70
90 1520 230 70	15 x 2,0	30	230	70
90 1615 230 70	16 x 1,5	30	230	70
90 1620 230 70	16 x 2,0	30	230	70
90 1815 236 72	18 x 1,5	36	236	72
90 1820 236 72	18 x 2,0	36	236	72
90 1830 236 72	18 x 3,0	36	236	72
90 2020 236 81	20 x 2,0	36	236	81
90 2025 236 81	20 x 2,5	36	236	81
90 2215 238 78	22 x 1,5	38	238	78
90 2220 238 78	22 x 2,0	38	238	78

Dietzel Hydraulik GmbH
Leedenstraße 10
04626 Löbichau

Tel.: +49 (36602) 140-140

E-Mail: vertrieb@dietzel-hydraulik.de

Order no.	D in mm	min. bending radiusR	A±3 in mm	B±3 in mm
90 2225 238 78	22 x 2,5	38	238	78
90 2235 238 78	22 x 3,5	38	238	78
90 2520 244 94	25 x 2,0	44	244	94
90 2525 244 94	25 x 2,5	44	244	94
90 2530 244 94	25 x 3,0	44	244	94
90 2540 244 94	25 x 4,0	44	244	94
90 2815 248 98	28 x 1,5	50	248	98
90 2820 248 98	28 x 2,0	50	248	98
90 2830 248 98	28 x 3,0	50	248	98
90 2835 248 98	28 x 3,5	50	248	98
90 3025 250 110	30 x 2,5	50	250	110
90 3030 250 110	30 x 3,0	50	250	110
90 3035 250 110	30 x 3,5	50	250	110
90 3040 250 110	30 x 4,0	50	250	110
90 3520 260 125	35 x 2,0	60	260	125
90 3525 260 125	35 x 2,5	60	260	125
90 3530 260 125	35 x 3,0	60	260	125
90 3540 260 125	35 x 4,0	60	260	125
90 3550 260 125	35 x 5,0	60	260	125
90 3825 265 140	38 x 2,5	65	265	140
90 3830 265 140	38 x 3,0	65	265	140
90 3840 265 140	38 x 4,0	65	265	140
90 3850 265 140	38 x 5,0	65	265	140
90 4220 280 165	42 x 2,0	80	280	165
90 4230 280 165	42 x 3,0	80	280	165
90 4250 280 165	42 x 5,0	80	280	165
90 5050 310 310	50 x 5,0	210	310	310
90 5060 310 310	50 x 6,0	210	310	310
90 6580 320 320	65 x 8,0	180	320	320

Dietzel Hydraulik GmbH
Leedenstraße 10
04626 Löbichau

Tel.: +49 (36602) 140-140

E-Mail: vertrieb@dietzel-hydraulik.de

Table of Contents

DKM straight 264
DKM 45° 266
DKM 90° 268
CEL straight 270
DKOL straight 272
DKOL 45° 274
DKOL 90° 276
AGR cylindrical straight 278
AGR conical straight 280
SFL straight 282
SFL 45° 284
SFL 90° 286
fixed DIN flange straight 288
fixed DIN flange 45° 291
fixed DIN flange 90° 294
loose DIN flange straight 297
loose DIN flange 45° 300
loose DIN flange 90° 303
weld-on nipple straight 306
weld-on nipple 45° 308
weld-on nipple 90° 310
Ferrules 117G 312
Ferrules 115 314
Ferrules 116 315
Clamp mouting 113 316
Hose clamp one piece 119 318
Hose clamp two piece 219 320
Ball valves with flange connection acc. to DIN 2673 321
Ball valves with SAE flange connection 322
Ball valves SAE flange connection 90° 1st variant 323
Ball valves with SAE flange connection 90° 2nd variant 325
Tank connector with SAE flange 326
Tank connector with SAE flange 90° elbow 327
Tank connector for gear pumps with square flange straight 328
Tank connector for gear pumps with square flange 90° elbow 329
Tank connector for return pipes for return pipe 330
RODI 332

Updated at: 02.04.2025

Dietzel Hydraulik GmbH
Leedenstraße 10
04626 Löbichau

Tel.: +49 (36602) 140-140

E-Mail: vertrieb@dietzel-hydraulik.de

Suction and low-pressure fittings

DKM straight

Updated at:
11.01.2023

Connection
Sealing head 60° outside cone with metric nut LL series

Standard
DIN 3863

Application
14A / 17A flexible tubes

Material
Steel

Surface protection
Zinc-electroplated

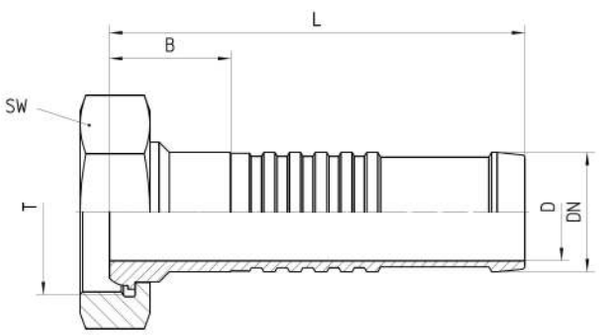

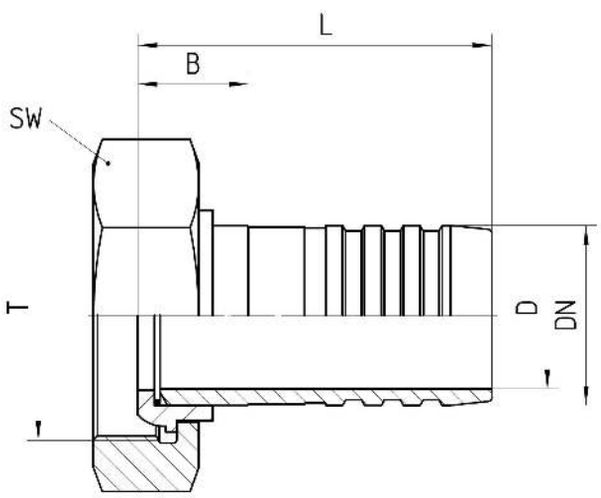

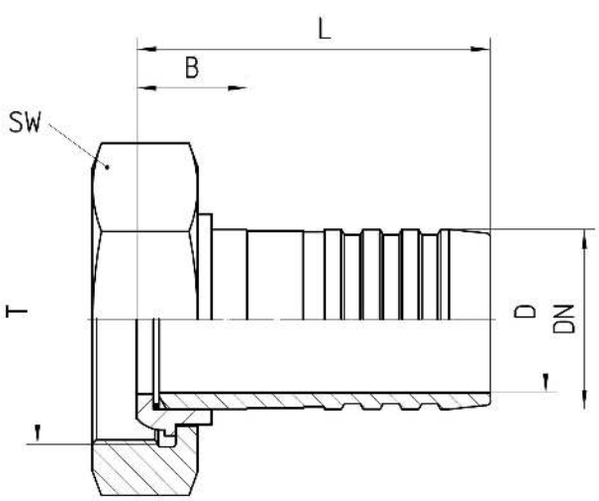

Order no.	DN in mm	T	SW in mm	D in mm	B±3 in mm	L ±3 in mm	Order No.	B±3 in mm	L±3 in mm
17.011-12-12	19	M30x1.5	36	14	25	105	17.011K-12-12	21	65
17.011-16-12	19	M38x1.5	46	14	23	103	17.011K-16-12	19	63

Dietzel Hydraulik GmbH
Leedenstraße 10
04626 Löbichau

Tel.: +49 (36602) 140-140

E-Mail: vertrieb@dietzel-hydraulik.de

Order no.	DN in mm	T	SW in mm	D in mm	B±3 in mm	L ±3 in mm	Order No.	B±3 in mm	L±3 in mm
17.011-12-16	25	M30x1.5	36	19	47	127	17.011K-12-16	43	87
17.011-16-16	25	M38x1.5	46	19	23	103	17.011K-16-16	19	63
17.011-20-16	25	M45x1.5	55	19	25	105	17.011K-20-16	21	65
17.011-12-20	31	M30x1.5	36	26	50	130	17.011K-12-20	46	90
17.011-16-20	31	M38x1.5	46	26	45	125	17.011K-16-20	41	85
17.011-20-20	31	M45x1.5	55	26	25	105	17.011K-20-20	21	65
17.011-24-20	31	M52x1.5	60	26	24	104	17.011K-24-20	20	64
17.011-16-24	38	M38x1.5	46	32	48	128	17.011K-16-24	44	88
17.011-20-24	38	M45x1.5	55	32	47	127	17.011K-20-24	43	87
17.011-24-24	38	M52x1.5	60	32	24	104	17.011K-24-24	20	64
17.011-32-24	38	M65x2.0	75	32	25	105	17.011K-32-24	21	65
17.011-20-32	51	M45x1.5	55	44	50	140	17.011K-20-32	55	100
17.011-24-32	51	M52x1.5	60	44	47	142	17.011K-24-32	52	97
17.011-32-32	51	M65x2.0	75	44	20	115	17.011K-32-32	25	70
17.011-40-32	51	M78x2.0	90	44	27	117	17.011K-40-32	32	77
17.011-24-36	60	M52x1.5	60	53	50	140	17.011K-24-36	55	100
17.011-32-36	60	M65x2.0	75	53	47	137	17.011K-32-36	46	91
17.011-40-36	60	M78x2.0	90	53	43	127	17.011K-40-36	46	91
17.011-48-36	60	M90x2.0	100	53	38	128	17.011K-48-36	43	88
17.011-32-48	76	M65x2.0	75	69	68	160	17.011K-32-48	75	120
17.011-40-48	76	M78x2.0	90	69	69	159	17.011K-40-48	74	119
17.011-48-48	76	M90x2.0	100	69	37	127	17.011K-48-48	42	87
17.011-56-48	76	M100x2.0	110	69	37	127	17.011K-56-48	42	87
17.011-40-56	90	M78x2.0	90	82	98	188	17.011K-40-56	82	127
17.011-48-56	90	M90x2.0	100	82	72	164	17.011K-48-56	79	124
17.011-56-56	90	M100x2.0	110	82	82	174	17.011K-56-56	77	122
17.011-48-64	102	M90x2.0	100	94	95	185	17.011K-48-64	84	132
17.011-56-64	102	M100x2.0	110	94	80	170	17.011K-56-64	82	130

Dietzel Hydraulik GmbH
Leedenstraße 10
04626 Löbichau

Tel.: +49 (36602) 140-140

E-Mail: vertrieb@dietzel-hydraulik.de

Suction and low-pressure fittings

DKM 45°

Updated at:
24.05.2022

Connection
Sealing head 60° outside cone with metric nut LL series

Standard
DIN 3863

Application
14A / 17A flexible tubes

Material
Steel

Surface protection
Zinc-electroplated

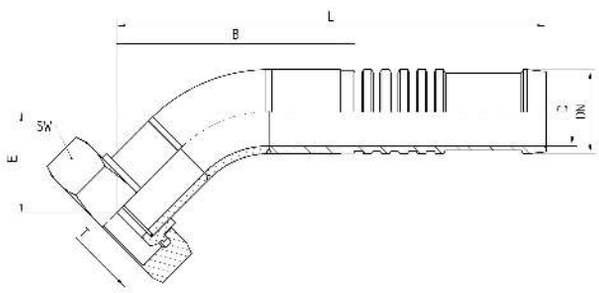

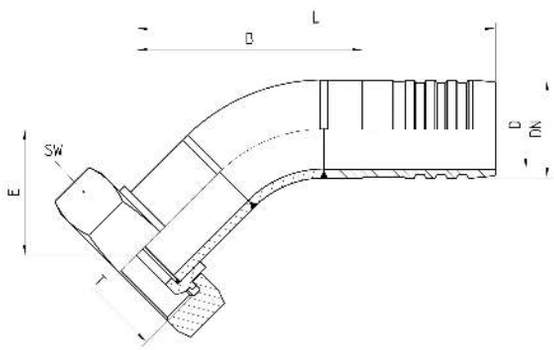

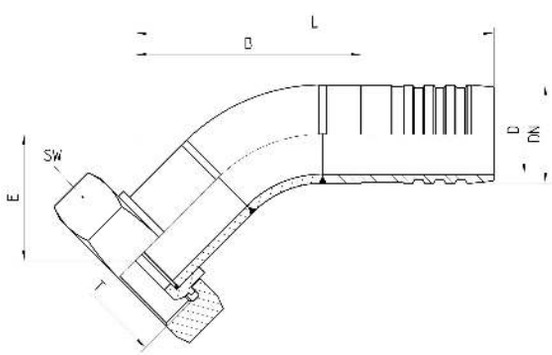

Order no.	DN in mm	T	SW in mm	D in mm	E±3 in mm	B±3 in mm	L±3 in mm	Order No.	B±3 in mm	L±3 in mm
17.015-12-12	19	M30x1.5	36	14	20	60	140	17.015K-12-12	56	100
17.015-16-12	19	M38x1.5	46	14	20	60	140	17.015K-16-12	56	100
17.015-12-16	25	M30x1.5	36	19	45	85	165	17.015K-12-16	81	125
17.015-16-16	25	M38x1.5	46	19	30	70	150	17.015K-16-16	66	110
17.015-20-16	25	M45x1.5	55	19	30	70	150	17.015K-20-16	66	110
17.015-12-20	31	M30x1.5	36	26	47	90	170	17.015K-12-20	86	130
17.015-16-20	31	M38x1.5	46	26	47	90	170	17.015K-16-20	86	130
17.015-20-20	31	M45x1.5	55	26	52	80	160	17.015K-20-20	76	120
17.015-24-20	31	M52x1.5	60	26	37	85	165	17.015K-24-20	81	125
17.015-16-24	38	M38x1.5	46	32	49	100	180	17.015K-16-24	96	140
17.015-20-24	38	M45x1.5	55	32	49	100	180	17.015K-20-24	96	140

Dietzel Hydraulik GmbH
Leedenstraße 10
04626 Löbichau

Tel.: +49 (36602) 140-140

E-Mail: vertrieb@dietzel-hydraulik.de

Order no.	DN in mm	T	SW in mm	D in mm	E±3 in mm	B±3 in mm	L±3 in mm	Order No.	B±3 in mm	L±3 in mm
17.015-24-24	38	M52x1.5	60	32	39	90	170	17.015K-24-24	86	130
17.015-32-24	38	M65x2.0	75	32	39	90	170	17.015K-32-24	86	130
17.015-20-32	51	M45x1.5	55	44	57	100	190	17.015K-20-32	105	150
17.015-24-32	51	M52x1.5	60	44	54	133	223	17.015K-24-32	105	150
17.015-32-32	51	M65x2.0	75	44	41	123	213	17.015K-32-32	90	135
17.015-40-32	51	M78x2.0	90	44	50	95	185	17.015K-40-32	100	145
17.015-24-36	60	M52x1.5	60	53	45	100	190	17.015K-24-36	105	150
17.015-32-36	60	M65x2.0	75	53	52	100	190	17.015K-32-36	105	150
17.015-40-36	60	M78x2.0	90	53	42	84	176	17.015K-40-36	95	140
17.015-48-36	60	M90x2.0	100	53	52	115	205	17.015K-48-36	120	165
17.015-32-48	76	M 65x2.0	75	69	65	140	230	17.015K-32-48	145	173
17.015-40-48	76	M 78x2.0	90	69	60	165	215	17.015K-40-48	115	160
17.015-48-48	76	M 90x2.0	100	69	54	105	195	17.015K-48-48	110	155
17.015-56-48	76	M100x2.0	110	69	60	110	215	17.015K-56-48	115	160
17.015-40-56	90	M 78x2.0	90	82	64	148	238	17.015K-40-56	153	198
17.015-48-56	90	M 90x2.0	100	82	75	160	250	17.015K-48-56	165	210
17.015-56-56	90	M100x2.0	110	82	75	160	250	17.015K-56-56	165	210
17.015-48-64	102	M 90x2.0	100	94	75	138	228	17.015K-48-64	140	188
17.015-56-64	102	M100x2.0	110	94	80	160	250	17.015K-56-64	162	210

Dietzel Hydraulik GmbH
Leedenstraße 10
04626 Löbichau

Tel.: +49 (36602) 140-140

E-Mail: vertrieb@dietzel-hydraulik.de

Suction and low-pressure fittings

DKM 90°

Updated at:
24.05.2022

Connection
Sealing head 60° outside cone with metric nut LL series

Standard
DIN 3863

Application
14A / 17A flexible tubes

Material
Steel

Surface protection
Zinc-electroplated

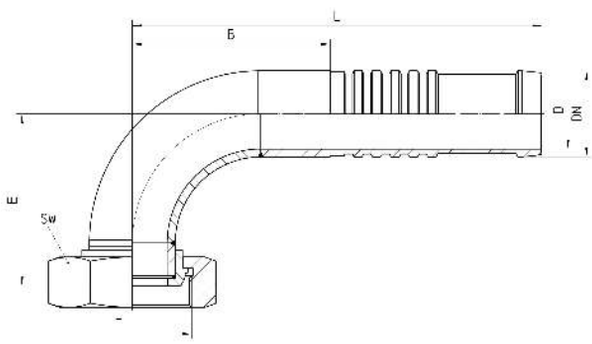

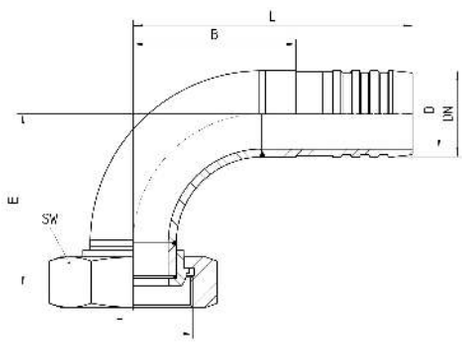

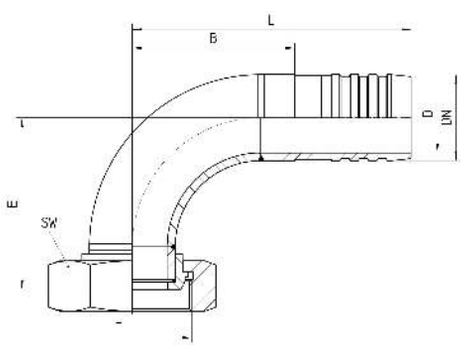

Order no.	DN in mm	T	SW in mm	D in mm	E±3 in mm	B±3 in mm	L±3 in mm	Order No.	B±3 in mm	L±3 in mm
17.019-12-12	19	M30x1.5	36	14	54	50	127	17.019K-12-12	50	94
17.019-16-12	19	M38x1.5	46	14	54	50	127	17.019K-16-12	50	94
17.019-12-16	25	M30x1.5	36	19	60	56	139	17.019K-12-16	56	100
17.019-16-16	25	M38x1.5	46	19	54	56	139	17.019K-16-16	56	100
17.019-20-16	25	M45x1.5	55	19	54	56	139	17.019K-20-16	56	100
17.019-12-20	31	M30x1.5	36	26	89	62	155	17.019K-12-20	62	106
17.019-16-20	31	M38x1.5	46	26	69	62	155	17.019K-16-20	62	106
17.019-20-20	31	M45x1.5	55	26	64	62	155	17.019K-20-20	62	106
17.019-24-20	31	M52x1.5	60	26	63	62	155	17.019K-24-20	62	106
17.019-16-24	38	M38x1.5	46	32	94	71	170	17.019K-16-24	71	115
17.019-20-24	38	M45x1.5	55	32	84	71	170	17.019K-20-24	71	115
17.019-24-24	38	M52x1.5	60	32	74	71	170	17.019K-24-24	71	115

Dietzel Hydraulik GmbH
Leedenstraße 10
04626 Löbichau

Tel.: +49 (36602) 140-140

E-Mail: vertrieb@dietzel-hydraulik.de

Order no.	DN in mm	T	SW in mm	D in mm	E±3 in mm	B±3 in mm	L±3 in mm	Order No.	B±3 in mm	L±3 in mm
17.019-32-24	38	M65x2.0	75	32	74	71	170	17.019K-32-24	71	115
17.019-20-32	51	M45x1.5	55	44	129	128	220	17.019K-20-32	121	166
17.019-24-32	51	M52x1.5	60	44	127	128	220	17.019K-24-32	121	166
17.019-32-32	51	M65x2.0	75	44	105	128	220	17.019K-32-32	121	166
17.019-40-32	51	M78x2.0	90	44	107	128	220	17.019K-40-32	121	166
17.019-24-36	60	M52x1.5	60	53	115	89	181	17.019K-24-36	96	141
17.019-32-36	60	M65x2.0	75	53	111	89	181	17.019K-32-36	96	141
17.019-40-36	60	M78x2.0	90	53	106	89	181	17.019K-40-36	96	141
17.019-48-36	60	M90x2.0	100	53	130	123	213	17.019K-48-36	96	141
17.019-32-48	76	M65x2.0	75	69	130	125	215	17.019K-32-48	130	175
17.019-40-48	76	M78x2.0	90	69	138	125	215	17.019K-40-48	130	175
17.019-48-48	76	M 90x2.0	100	69	131	125	215	17.019K-48-48	130	175
17.019-56-48	76	M100x2	110	69	132	125	215	17.019K-56-48	130	175
17.019-40-56	90	M78x2	90	82	133	154	223	17.019K-40-56	128	173
17.019-48-56	90	M90x2.0	100	82	168	144	234	17.019K-48-56	149	194
17.019-56-56	90	M100x2.0	110	82	162	144	234	17.019K-56-56	149	194
17.019-48-64	102	M90x2.0	100	94	159	160	252	17.019K-48-64	144	192
17.019-56-64	102	M100x2.0	110	94	182	163	253	17.019K-56-64	165	213

Dietzel Hydraulik GmbH
Leedenstraße 10
04626 Löbichau

Tel.: +49 (36602) 140-140

E-Mail: vertrieb@dietzel-hydraulik.de

Suction and low-pressure fittings

CEL straight

Updated at:
24.05.2022

Connection
Metric male thread 24° with inner cone and pipe connection L series

Standard
ISO 8434-1

Application
14A / 17A flexible tubes

Material
Steel

Surface protection
Zinc-electroplated

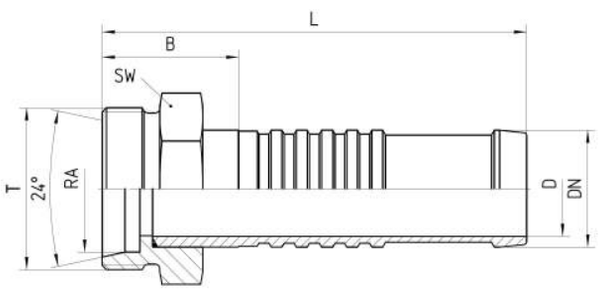

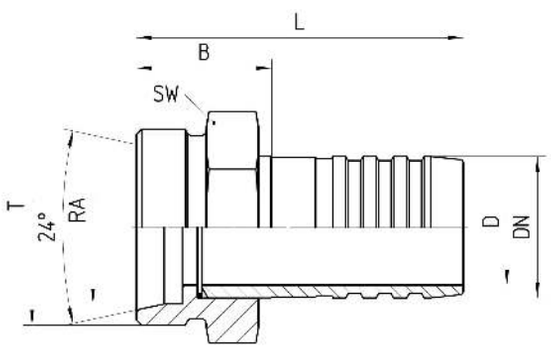

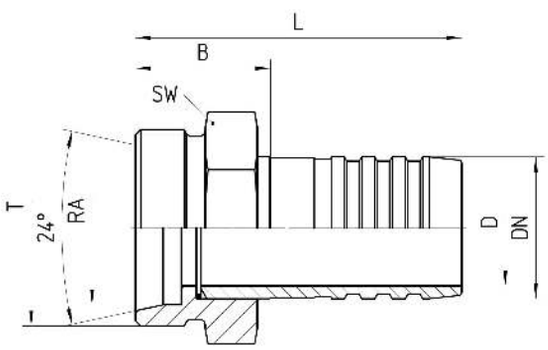

Order no.	RA	G	DN in mm	SW in mm	D in mm	B±3 in mm	L±3 in mm	Order No.	B±3 in mm	L±3 in mm
17.170-10-12	18L	M 26x1.5	19	27	14	32	112	17.170K-10-12	28	72
17.170-12-12	22L	M 30x2.0	19	36	14	34	114	17.170K-12-12	30	74
17.170-16-12	28L	M 36x2.0	19	36	14	35	115	17.170K-16-12	31	75
17.170-12-16	22L	M 30x2.0	25	36	19	46	126	17.170K-12-16	42	86
17.170-16-16	28L	M 36x2.0	25	36	19	35	115	17.170K-16-16	31	75
17.170-20-16	35L	M 45x2.0	25	46	19	34	114	17.170K-20-16	34	78
17.170-24-16	42L	M 52x2.0	25	55	19	41	121	17.170K-24-16	37	81
17.170-12-20	22L	M 30x2.0	31	36	26	48	128	17.170K-12-20	44	88

Dietzel Hydraulik GmbH
Leedenstraße 10
04626 Löbichau

Tel.: +49 (36602) 140-140

E-Mail: vertrieb@dietzel-hydraulik.de

Order no.	RA	G	DN in mm	SW in mm	D in mm	B±3 in mm	L±3 in mm	Order No.	B±3 in mm	L±3 in mm
17.170-16-20	28L	M 36x2.0	31	36	26	37	117	17.170K-16-20	33	77
17.170-20-20	35L	M 45x2.0	31	46	26	38	118	17.170K-20-20	34	78
17.170-24-20	42L	M 52x2.0	31	55	26	48	128	17.170K-24-20	37	81
17.170-12-24	22L	M 30x2.0	38	36	32	48	128	17.170K-12-24	37	81
17.170-16-24	28L	M 36x2.0	38	36	32	47	127	17.170K-16-24	43	87
17.170-20-24	35L	M 45x2.0	38	46	32	38	118	17.170K-20-24	44	88
17.170-24-24	42L	M 52x2.0	38	55	32	41	121	17.170K-24-24	37	81
17.170-16-32	28L	M 36x2.0	51	36	44	50	142	17.170K-16-32	57	102
17.170-20-32	35L	M 45x2.0	51	46	44	79	171	17.170K-20-32	55	100
17.170-24-32	42L	M 52x2.0	51	55	44	39	131	17.170K-24-32	46	91
17.170-20-36	35L	M 45x2.0	60	46	53	58	150	17.170K-20-36	65	110
17.170-24-36	42L	M 52x2.0	60	55	53	56	148	17.170K-24-36	63	108

Dietzel Hydraulik GmbH
Leedenstraße 10
04626 Löbichau

Tel.: +49 (36602) 140-140

E-Mail: vertrieb@dietzel-hydraulik.de

Suction and low-pressure fittings

DKOL straight

Updated at:
11.01.2023

Connection
Sealing head 24° outside cone O-ring sealing with metric nut L series

Standard
ISO 8434-1

Application
14A / 17A flexible tubes

Material
Steel

Surface protection
Zinc-electroplated

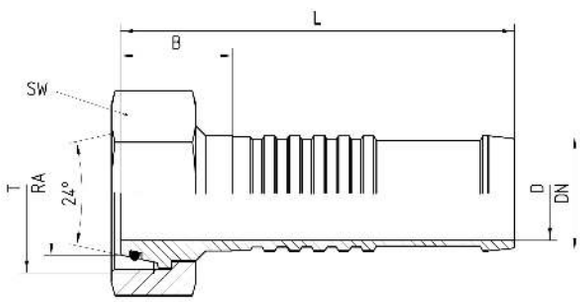

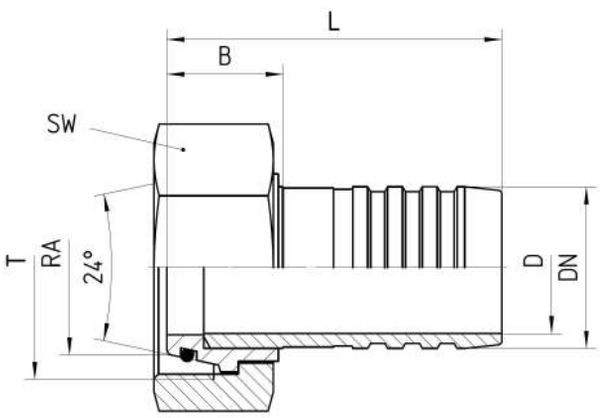

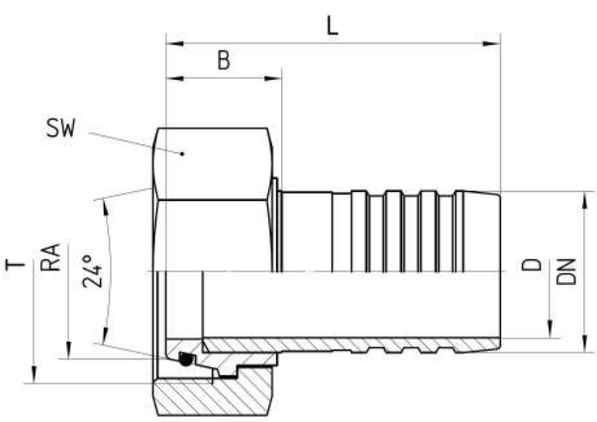

Order no.	DN in mm	RA	T	SW in mm	D in mm	B±3 in mm	L±3 in mm	Order No.	B±3 in mm	L±3 in mm
17.051-10-12	19	18L	M26x1.5	32	14	28	108	17.051K-10-12	23	67
17.051-12-12	19	22L	M30x2.0	36	14	28	108	17.051K-12-12	24	68
17.051-16-12	19	28L	M36x2.0	41	14	28	108	17.051K-16-12	24	68

Dietzel Hydraulik GmbH
Leedenstraße 10
04626 Löbichau

Tel.: +49 (36602) 140-140

E-Mail: vertrieb@dietzel-hydraulik.de

Order no.	DN in mm	RA	T	SW in mm	D in mm	B±3 in mm	L±3 in mm	Order No.	B±3 in mm	L±3 in mm
17.051-12-16	25	22L	M30x2.0	36	19	28	108	17.051K-12-16	46	90
17.051-16-16	25	28L	M36x2.0	41	19	28	108	17.051K-16-16	24	68
17.051-20-16	25	35L	M45x2.0	50	19	30	110	17.051K-20-16	26	70
17.051-24-16	25	42L	M52x2.0	60	19	30	110	17.051K-24-16	26	70
17.051-12-20	31	22L	M30x2.0	36	26	72	152	17.051K-12-20	44	88
17.051-16-20	31	28L	M36x2.0	41	26	45	125	17.051K-16-20	41	85
17.051-20-20	31	35L	M45x2.0	50	26	30	110	17.051K-20-20	26	70
17.051-24-20	31	42L	M52x2.0	60	26	38	118	17.051K-24-20	26	70
17.051-12-24	38	22L	M30x2.0	36	32	63	143	17.051K-12-24	56	100
17.051-16-24	38	28L	M36x2.0	41	32	65	145	17.051K-16-24	46	90
17.051-20-24	38	35L	M45x2.0	50	32	47	127	17.051K-20-24	43	87
17.051-24-24	38	42L	M52x2.0	60	32	30	110	17.051K-24-24	26	70
17.051-16-32	51	28L	M36x2.0	41	44	68	160	17.051K-16-32	70	115
17.051-20-32	51	35L	M45x2.0	50	44	67	159	17.051K-20-32	55	100
17.051-24-32	51	42L	M52x2.0	60	44	69	161	17.051K-24-32	58	103
17.051-20-36	60	35L	M45x2.0	50	53	63	155	17.051K-20-36	70	115
17.051-24-36	60	42L	M52x2.0	60	53	63	155	17.051K-24-36	70	115

Dietzel Hydraulik GmbH
Leedenstraße 10
04626 Löbichau

Tel.: +49 (36602) 140-140

E-Mail: vertrieb@dietzel-hydraulik.de

Suction and low-pressure fittings

DKOL 45°

Updated at:
11.01.2023

Connection
Sealing head 24° outside cone O-ring sealing with metric nut L series

Standard
ISO 8434-1

Application
14A / 17A flexible tubes

Material
Steel

Surface protection
Zinc-electroplated

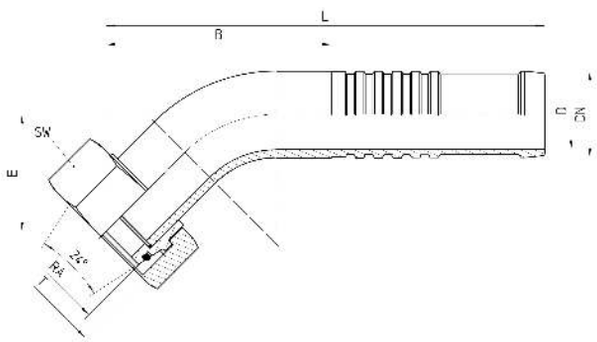

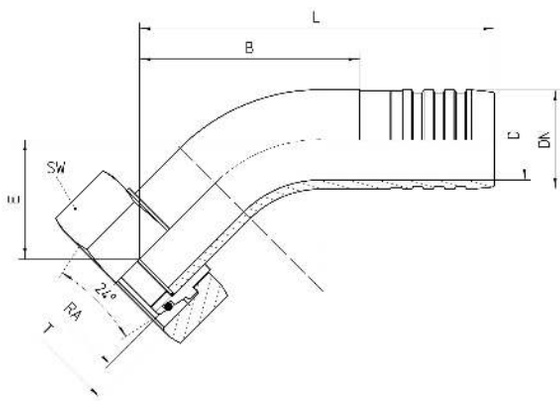

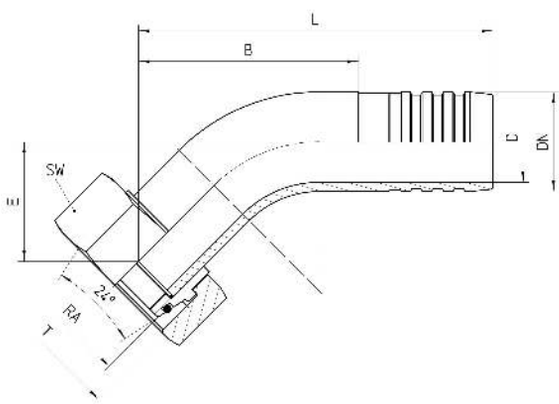

Order no.	DN in mm	RA	T	SW in mm	D in mm	E±3 in mm	B±3 in mm	L±3 in mm	Order No.	B±3 in mm	L±3 in mm
17.055-10-12	19	18L	M26x1.5	32	14	27	60	140	17.055K	56	100
17.055-12-12	19	22L	M30x2.0	36	14	27	60	140	17.055K	56	100
17.055-16-12	19	28L	M36x2.0	41	14	27	60	140	17.055K	56	100
17.055-12-16	25	22L	M30x2.0	36	19	34	70	150	17.055K	61	105
17.055-16-16	25	28L	M36x2.0	41	19	34	70	150	17.055K	61	105
17.055-20-16	25	35L	M45x2.0	51	19	34	71	151	17.055K	61	105
17.055-24-16	25	42L	M52x2.0	60	19	34	71	151	17.055K	61	105
17.055-12-20	31	22L	M30x2.0	36	26	46	80	160	17.055K	76	120

Dietzel Hydraulik GmbH
Leedenstraße 10
04626 Löbichau

Tel.: +49 (36602) 140-140

E-Mail: vertrieb@dietzel-hydraulik.de

Order no.	DN in mm	RA	T	SW in mm	D in mm	E±3 in mm	B±3 in mm	L±3 in mm	Order No.	B±3 in mm	L±3 in mm
17.055-16-20	31	28L	M36x2.0	41	26	46	89	169	17.055K	76	120
17.055-20-20	31	35L	M45x2.0	50	26	45	86	166	17.055K	78	122
17.055-24-20	31	42L	M52x2.0	60	26	43	82	166	17.055K	78	122
17.055-12-24	38	22L	M30x2.0	36	32	70	115	195	17.055K	111	155
17.055-16-24	38	28L	M36x2.0	41	32	53	115	195	17.055K	88	132
17.055-20-24	38	35L	M45x2.0	50	32	53	115	195	17.055K	106	150
17.055-24-24	38	42L	M52x2.0	60	32	53	115	195	17.055K	96	140
17.055-16-32	51	28L	M36x2.0	41	44	57	131	223	17.055K	124	169
17.055-20-32	51	35L	M45x2.0	50	44	57	131	223	17.055K	124	169
17.055-24-32	51	42L	M52x2.0	60	44	57	131	223	17.055K	124	169
17.055-20-36	60	35L	M45x2.0	50	53	57	101	193	17.055K	120	165
17.055-24-36	60	42L	M52x2.0	60	53	61	113	205	17.055K	120	165

Dietzel Hydraulik GmbH
Leedenstraße 10
04626 Löbichau

Tel.: +49 (36602) 140-140

E-Mail: vertrieb@dietzel-hydraulik.de

Suction and low-pressure fittings

DKOL 90°

Updated at:
24.05.2022

Connection
Sealing head 24° outside cone O-ring sealing with metric nut L series

Standard
ISO 8434-1

Application
14A / 17A flexible tubes

Material
Steel

Surface protection
Zinc-electroplated

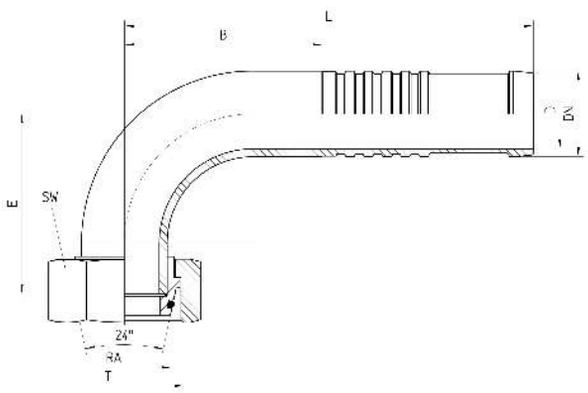

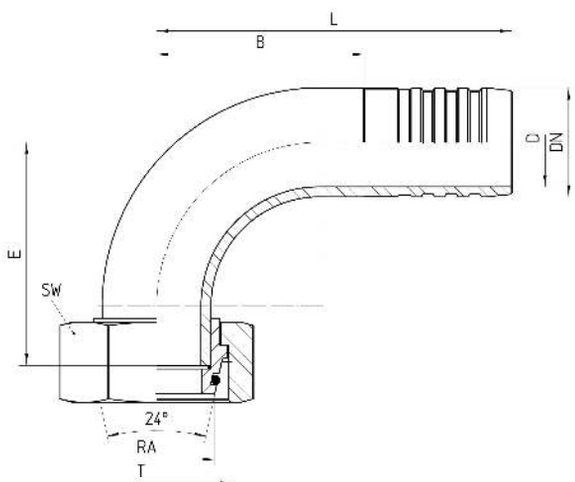

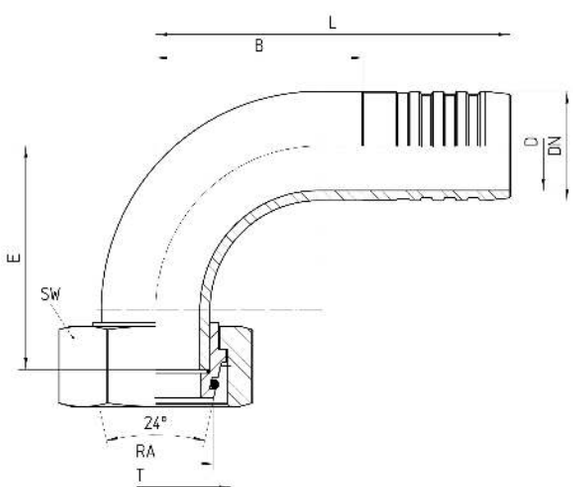

Order no.	DN in mm	RA	T	SW in mm	D in mm	E±3 in mm	B±3 in mm	L±3 in mm	Order No.	B±3 in mm	L±3 in mm
17.059-10-12	19	18L	M26x1.5	32	14	53	47	127	17.059K	50	94
17.059-12-12	19	22L	M30x2.0	36	14	51	47	127	17.059K	50	94
17.059-16-12	19	28L	M36x2.0	41	14	54	47	127	17.059K	50	94
17.059-12-16	25	22L	M30x2.0	36	19	67	59	139	17.059K	56	100

Dietzel Hydraulik GmbH
Leedenstraße 10
04626 Löbichau

Tel.: +49 (36602) 140-140

E-Mail: vertrieb@dietzel-hydraulik.de

Order no.	DN in mm	RA	T	SW in mm	D in mm	E±3 in mm	B±3 in mm	L±3 in mm	Order No.	B±3 in mm	L±3 in mm
17.059-16-16	25	28L	M36x2.0	41	19	65	59	139	17.059K	56	100
17.059-20-16	25	35L	M45x2.0	50	19	66	59	139	17.059K	56	100
17.059-24-16	25	42L	M52x2.0	60	19	65	59	139	17.059K	56	100
17.059-12-20	31	22L	M30x2.0	36	26	80	75	155	17.059K	62	106
17.059-16-20	31	28L	M36x2.0	41	26	82	75	155	17.059K	62	106
17.059-20-20	31	35L	M45x2.0	50	26	75	75	155	17.059K	62	106
17.059-24-20	31	42L	M52x2.0	60	26	75	75	155	17.059K	62	106
17.059-12-24	38	22L	M30x2.0	36	32	118	90	170	17.059K	71	115
17.059-16-24	38	28L	M36x2.0	41	32	93	90	170	17.059K	71	115
17.059-20-24	38	35L	M45x2.0	50	32	91	90	170	17.059K	71	115
17.059-24-24	38	42L	M52x2.0	60	32	90	90	170	17.059K	71	115
17.059-16-32	51	28L	M36x2.0	41	44	152	128	220	17.059K	121	166
17.059-20-32	51	35L	M45x2.0	50	44	113	128	220	17.059K	121	166
17.059-24-32	51	42L	M52x2.0	60	44	112	128	220	17.059K	121	166
17.059-20-36	60	35L	M45x2.0	50	53	128	89	181	17.059K	96	141
17.059-24-36	60	42L	M52x2	60	53	127	89	181	17.059K	96	141

Dietzel Hydraulik GmbH
Leedenstraße 10
04626 Löbichau

Tel.: +49 (36602) 140-140

E-Mail: vertrieb@dietzel-hydraulik.de

Suction and low-pressure fittings

AGR cylindrical straight

Updated at:
11.01.2023

Connection
BSPP male thread (G) with 60° inner cone

Standard
ISO 8434-6

Application
14A / 17A flexible tubes

Material
Steel

Surface protection
Zinc-electroplated

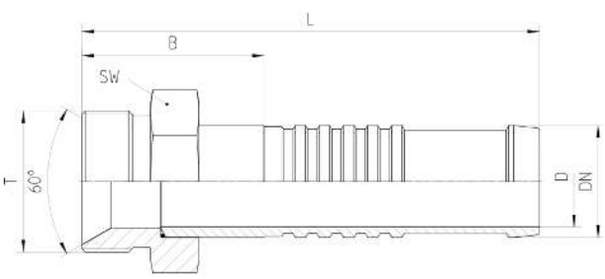

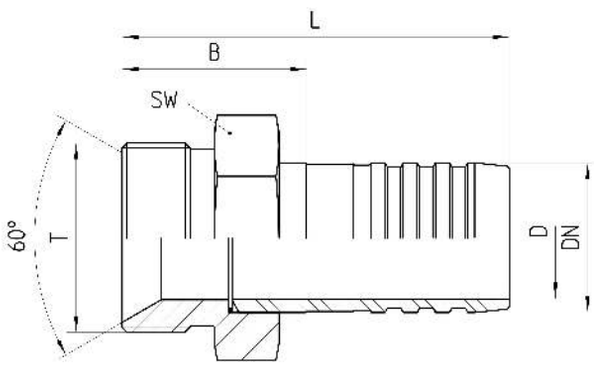

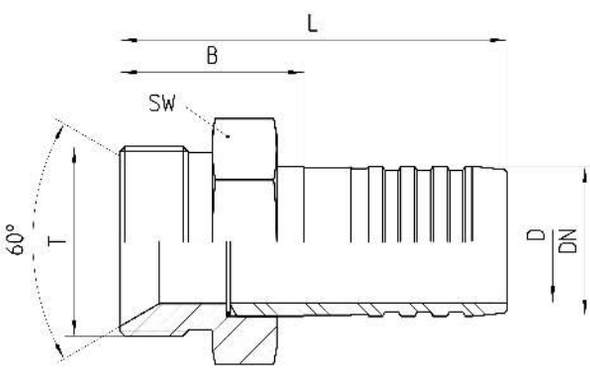

Order no.	DN in mm	T in inch	SW in mm	D in mm	B±3 in mm	L±3 in mm	Order No.	B±3 in mm	L±3 in mm
17.260-08-12	19	G 1/2	22	14	40	120	17.260K-08-12	36	80
17.260-12-12	19	G 3/4	27	14	40	120	17.260K-12-12	36	80
17.260-16-12	19	G 1	36	14	52	132	17.260K-16-12	48	92
17.260-12-16	25	G 3/4	27	19	40	120	17.260K-12-16	36	80
17.260-16-16	25	G 1	36	19	40	120	17.260K-16-16	36	80
17.260-20-16	25	G 1 1/4	46	19	53	133	17.260K-20-16	49	93
17.260-12-20	31	G 3/4	27	26	53	133	17.260K-12-20	49	93
17.260-16-20	31	G 1	36	26	53	133	17.260K-16-20	36	80
17.260-20-20	31	G 1 1/4	46	26	40	120	17.260K-20-20	36	80

Dietzel Hydraulik GmbH
Leedenstraße 10
04626 Löbichau

Tel.: +49 (36602) 140-140

E-Mail: vertrieb@dietzel-hydraulik.de

Order no.	DN in mm	T in inch	SW in mm	D in mm	B±3 in mm	L±3 in mm	Order No.	B±3 in mm	L±3 in mm
17.260-24-20	31	G 1 1/2	50	26	63	143	17.260K-24-20	59	103
17.260-12-24	38	G 3/4	27	32	60	140	17.260K-12-24	73	117
17.260-16-24	38	G 1	36	32	60	140	17.260K-16-24	49	93
17.260-20-24	38	G 1 1/4	46	32	45	125	17.260K-20-24	39	83
17.260-24-24	38	G 1 1/2	50	32	45	125	17.260K-24-24	45	89
17.260-32-24	38	G 2	65	32	72	152	17.260K-32-24	68	112
17.260-16-32	51	G 1	36	44	84	176	17.260K-16-32	70	115
17.260-20-32	51	G 1 1/4	46	44	79	171	17.260K-20-32	63	108
17.260-24-32	51	G 1 1/2	50	44	46	138	17.260K-24-32	66	111
17.260-32-32	51	G 2	65	44	48	140	17.260K-32-32	50	95
17.260-40-32	51	G 2 1/2	80	44	58	150	17.260K-40-32	50	95
17.260-20-36	60	G 1 1/4	46	53	80	172	17.260K-20-36	88	133
17.260-24-36	60	G 1 1/2	50	53	81	173	17.260K-24-36	88	133
17.260-32-36	60	G 2	65	53	58	150	17.260K-32-36	55	100
17.260-40-36	60	G 2 1/2	80	53	58	150	17.260K-40-36	70	115
17.260-48-36	60	3	90	53	63	155	17.260K-48-36	70	115
17.260-40-48	76	G 2 1/2	80	60	59	151	17.260K-40-48	66	111
17.260-48-48	76	G 3	90	60	55	147	17.260K-48-48	62	107

Dietzel Hydraulik GmbH
Leedenstraße 10
04626 Löbichau

Tel.: +49 (36602) 140-140

E-Mail: vertrieb@dietzel-hydraulik.de

Suction and low-pressure fittings

AGR conical straight

Updated at:
24.05.2022

Connection
BSPT male thread (R) coned sealing

Application
14A / 17A flexible tubes

Material
Steel

Surface protection
Zinc-electroplated

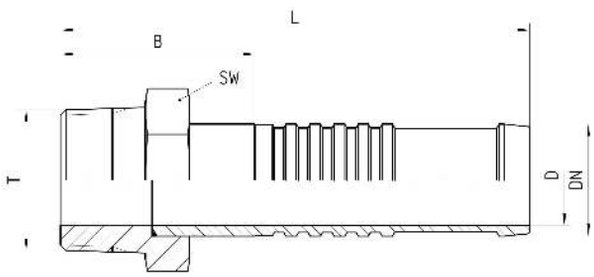

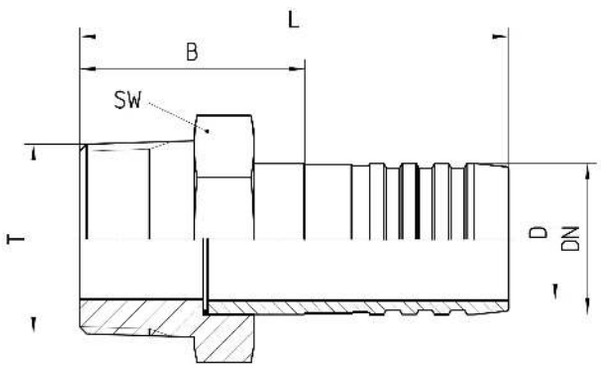

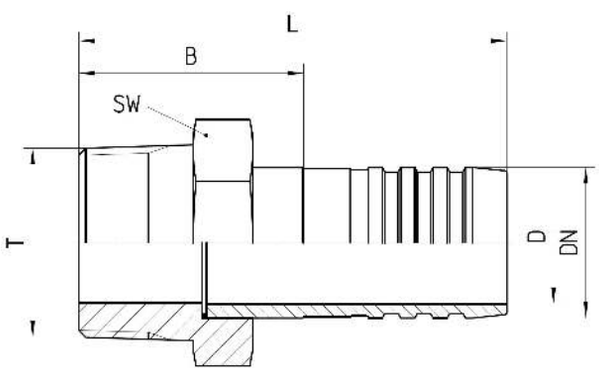

Order no.	DN in mm	T in inch	SW in mm	D in mm	B±3 in mm	L±3 in mm	Order No.	B±3 in mm	L±3 in mm
17.301-08-12	19	R 1/2	22	14	30	110	17.301K-08-12	37	81
17.301-12-12	19	R 3/4	30	14	42	122	17.301K-12-12	38	82
17.301-16-12	19	R 1	41	14	46	126	17.301K-16-12	42	86
17.301-12-16	25	R 3/4	27	19	40	120	17.301K-12-16	36	80
17.301-16-16	25	R 1	41	19	35	115	17.301K-16-16	41	85
17.301-20-16	25	R 1 1/4	46	19	47	127	17.301K-20-16	56	100
17.301-12-20	31	R 3/4	27	26	52	132	17.301K-12-20	36	80
17.301-16-20	31	R 1	41	26	56	136	17.301K-16-20	36	80
17.301-20-20	31	R 1 1/4	46	26	57	137	17.301K-20-20	49	93
17.301-24-20	31	R 1 1/2	50	26	57	137	17.301K-24-20	53	97
17.301-12-24	38	R 3/4	27	32	48	128	17.301K-12-24	44	88

Dietzel Hydraulik GmbH
Leedenstraße 10
04626 Löbichau

Tel.: +49 (36602) 140-140

E-Mail: vertrieb@dietzel-hydraulik.de

Order no.	DN in mm	T in inch	SW in mm	D in mm	B±3 in mm	L±3 in mm	Order No.	B±3 in mm	L±3 in mm
17.301-16-24	38	R 1	41	32	44	124	17.301K-16-24	44	88
17.301-20-24	38	R 1 1/4	46	32	47	127	17.301K-20-24	43	87
17.301-24-24	38	R 1 1/2	50	32	47	127	17.301K-24-24	52	96
17.301-32-24	38	R 2	65	32	66	146	17.301K-32-24	62	106
17.301-16-32	51	R 1	41	44	73	165	17.301K-16-32	70	115
17.301-20-32	51	R 1 1/4	46	44	78	170	17.301K-20-32	71	116
17.301-24-32	51	R 1 1/2	50	44	78	170	17.301K-24-32	65	110
17.301-32-32	51	R 2	65	44	61	153	17.301K-32-32	68	113
17.301-40-32	51	R 2 1/2	80	44	63	155	17.301K-40-32	70	115
17.301-20-36	60	R 1 1/4	46	53	82	174	17.301K-20-36	71	116
17.301-24-36	60	R 1 1/2	50	53	82	174	17.301K-24-36	72	117
17.301-32-36	60	R 2	65	53	58	150	17.301K-32-36	77	122
17.301-40-36	60	R 2 1/2	80	53	63	155	17.301K-40-36	70	115
17.301-48-36	60	R 3	90	53	73	165	17.301K-48-36	80	125
17.301-32-48	76	R 2	65	69	92	184	17.301K-32-48	78	123
17.301-40-48	76	R 2 1/2	80	69	82	174	17.301K-40-48	69	114
17.301-48-48	76	R 3	90	69	85	177	17.301K-48-48	72	117
17.301-40-56	90	G 2 1/2	80	82	81	173	17.301K-40-56	88	133
17.301-48-56	90	G 3	90	82	78	170	17.301K-48-56	95	140
17.301-48-64	102	G 3	90	94	123	215	17.301K-48-64	104	152

Dietzel Hydraulik GmbH
Leedenstraße 10
04626 Löbichau

Tel.: +49 (36602) 140-140

E-Mail: vertrieb@dietzel-hydraulik.de

Suction and low-pressure fittings

SFL straight

Updated at:
11.01.2023

Connection
SAE flange 3000PSI (L series)

Standard
ISO 6162-1

Application
14A / 17A flexible tubes

Material
Steel

Surface protection
Zinc-electroplated

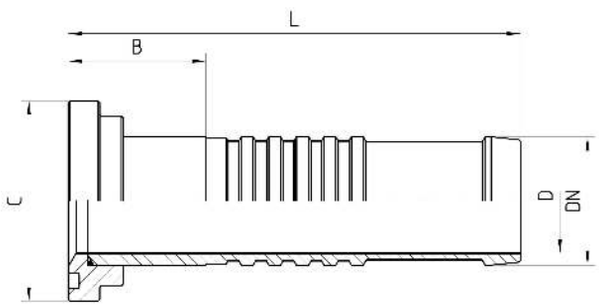

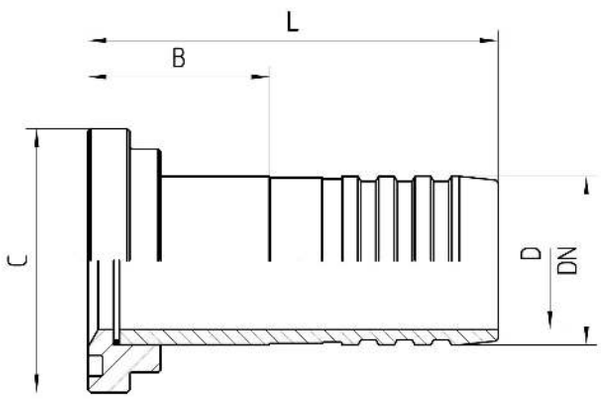

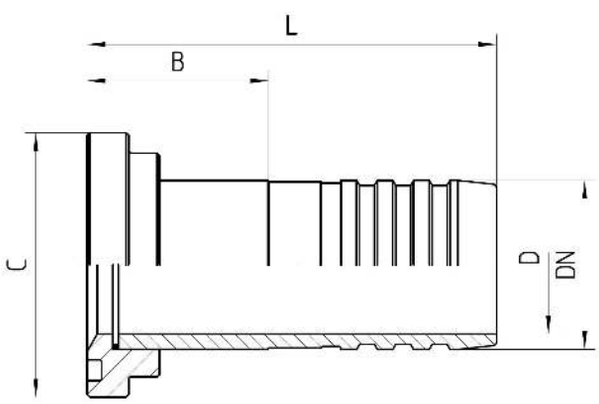

Order no.	DN in mm	flange in inch	C in mm	D in mm	B±3 in mm	L±3 in mm	Order-No.	B±3 in mm	L±3 in mm
17.420-08-12	19	1/2	30,2	14	36	116	17.420K-08-12	32	76
17.420-12-12	19	3/4	38,1	14	27	107	17.420K-12-12	23	67
17.420-16-12	19	1	44,4	14	27	107	17.420K-16-12	23	67
17.420-20-12	19	1 1/4	50,8	14	24	104	17.420K-20-12	20	64
17.420-12-16	25	3/4	38,1	19	46	126	17.420K-12-16	42	86
17.420-16-16	25	1	44,4	19	27	107	17.420K-16-16	23	67

Dietzel Hydraulik GmbH
Leedenstraße 10
04626 Löbichau

Tel.: +49 (36602) 140-140

E-Mail: vertrieb@dietzel-hydraulik.de

Order no.	DN in mm	flange in inch	C in mm	D in mm	B±3 in mm	L±3 in mm	Order-No.	B±3 in mm	L±3 in mm
17.420-20-16	25	1 1/4	50,8	19	27	107	17.420K-20-16	23	67
17.420-24-16	25	1 1/2	60,3	19	28	108	17.420K-24-16	24	68
17.420-12-20	31	3/4	38,1	26	68	148	17.420K-12-20	44	88
17.420-16-20	31	1	44,4	26	47	127	17.420K-16-20	43	87
17.420-20-20	31	1 1/4	50,8	26	37	117	17.420K-20-20	33	77
17.420-24-20	31	1 1/2	60,3	26	38	118	17.420K-24-20	43	87
17.420-32-20	31	2	71,4	26	47	127	17.420K-32-20	43	87
17.420-16-24	38	1	44,4	32	49	129	17.420K-16-24	45	89
17.420-20-24	38	1 1/4	50,8	32	45	125	17.420K-20-24	41	85
17.420-24-24	38	1 1/2	60,3	32	28	108	17.420K-24-24	34	78
17.420-32-24	38	2	71,4	32	46	126	17.420K-32-24	42	86
17.420-40-24	38	2 1/2	84,1	32	46	126	17.420K-40-24	62	106
17.420-20-32	51	1 1/4	50,8	44	71	163	17.420K-20-32	73	118
17.420-24-32	51	1 1/2	60,3	44	63	155	17.420K-24-32	60	105
17.420-32-32	51	2	71,4	44	36	128	17.420K-32-32	53	98
17.420-40-32	51	2 1/2	84,1	44	46	138	17.420K-40-32	63	108
17.420-48-32	51	3	101,6	44	45	137	17.420K-48-32	63	108
17.420-24-36	60	1 1/2	60,3	53	62	154	17.420K-24-36	75	120
17.420-32-36	60	2	71,4	53	58	150	17.420K-32-36	65	110
17.420-40-36	60	2 1/2	84,1	53	38	130	17.420K-40-36	45	90
17.420-48-36	60	3	101,6	53	58	150	17.420K-48-36	65	110
17.420-56-36	60	3 1/2	114,3	53	127	219	17.420K-56-36	75	120
17.420-32-48	76	2	71,4	69	93	185	17.420K-32-48	100	145
17.420-40-48	76	2 1/2	84,1	69	77	169	17.420K-40-48	84	129
17.420-48-48	76	3	101,6	69	58	150	17.420K-48-48	64	109
17.420-56-48	76	3 1/2	114,3	69	67	159	17.420K-56-48	82	127
17.420-64-48	76	4	127,0	69	93	185	17.420K-64-48	80	125
17.420-40-56	90	2 1/2	84,1	82	100	192	17.420K-40-56	107	152
17.420-48-56	90	3	101,6	82	80	172	17.420K-48-56	87	132
17.420-56-56	90	3 1/2	114,3	82	80	172	17.420K-56-56	67	112
17.420-64-56	90	4	127,0	82	80	172	17.420K-64-56	97	142
17.420-80-56	90	5	152,4	82	146	238	17.420K-80-56	103	148
17.420-48-64	102	3	101,6	94	96	188	17.420K-48-64	98	146
17.420-56-64	102	3 1/2	114,3	94	83	175	17.420K-56-64	87	135
17.420-64-64	102	4	127,0	94	73	165	17.420K-64-64	77	125
17.420-80-64	102	5	152,4	94	91	183	17.420K-80-64	95	143
17.420-56-96	152	3 1/2	114,3	142	212	340	17.420K-56-96	205	285
17.420-64-96	152	4	127,0	142	210	338	17.420K-64-96	202	282
17.420-80-96	152	5	152,4	142	82	210	17.420K-80-96	92	172

Dietzel Hydraulik GmbH
Leedenstraße 10
04626 Löbichau

Tel.: +49 (36602) 140-140

E-Mail: vertrieb@dietzel-hydraulik.de

Suction and low-pressure fittings

SFL 45°

Updated at:
02.04.2025

Connection
SAE flange 3000PSI (L series)

Standard
ISO 6162-1

Application
14A / 17A flexible tubes

Material
Steel

Surface protection
Zinc-electroplated

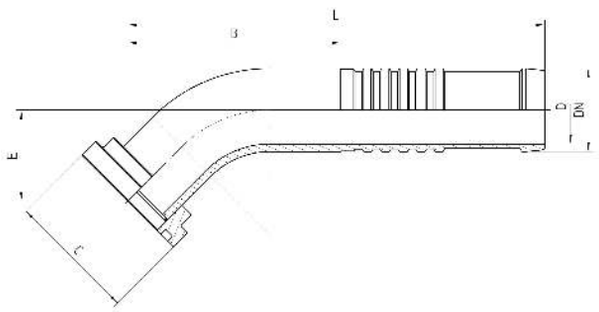

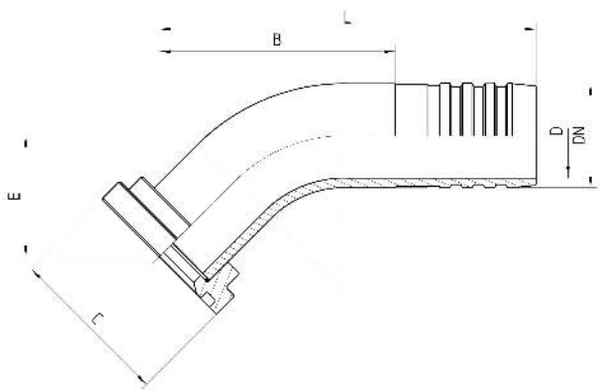

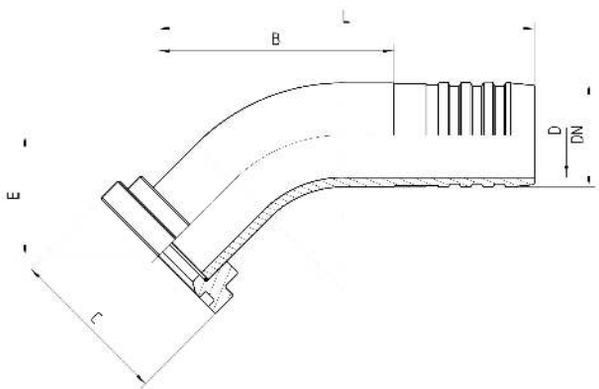

Order no.	DN in mm	flange in inch	C in mm	D in mm	E±3 in mm	B±3 in mm	L±3 in mm	Order-No.	B±3 in mm	L±3 in mm
17.450-08-12	19	1/2	30,2	14	26	60	140	17.450K-08-12	56	100
17.450-12-12	19	3/4	38,1	14	26	60	140	17.450K-12-12	56	100
17.450-16-12	19	1	44,4	14	26	60	140	17.450K-16-12	56	100
17.450-20-12	19	1 1/4	50,8	14	25	60	140	17.450K-20-12	56	100
17.450-12-16	25	3/4	38,1	19	31	65	145	17.450K-12-16	61	105
17.450-16-16	25	1	44,4	19	31	65	145	17.450K-16-16	61	105
17.450-20-16	25	1 1/4	50,8	19	30	64	144	17.450K-20-16	60	104
17.450-24-16	25	1 1/2	60,3	19	32	66	146	17.450K-24-16	62	106
17.450-12-20	31	3/4	38,1	26	57	105	185	17.450K-12-20	101	145

Dietzel Hydraulik GmbH
Leedenstraße 10
04626 Löbichau

Tel.: +49 (36602) 140-140

E-Mail: vertrieb@dietzel-hydraulik.de

Order no.	DN in mm	flange in inch	C in mm	D in mm	E±3 in mm	B±3 in mm	L±3 in mm	Order-No.	B±3 in mm	L±3 in mm
17.450-16-20	31	1	44,4	26	36	85	165	17.450K-16-20	81	125
17.450-20-20	31	1 1/4	50,8	26	36	77	157	17.450K-20-20	81	125
17.450-24-20	31	1 1/2	60,3	26	37	85	165	17.450K-24-20	81	125
17.450-32-20	31	2	71,4	26	58	106	186	17.450K-32-20	102	146
17.450-16-24	38	1	44,4	32	52	115	195	17.450K-16-24	91	135
17.450-20-24	38	1 1/4	50,8	32	52	117	197	17.450K-20-24	101	145
17.450-24-24	38	1 1/2	60,3	32	41	103	183	17.450K-24-24	91	135
17.450-32-24	38	2	71,4	32	61	122	202	17.450K-32-24	116	160
17.450-40-24	38	2 1/2	84,1	32	61	122	202	17.450K-40-24	101	145
17.450-20-32	51	1 1/4	50,8	44	70	145	237	17.450K-20-32	127	172
17.450-24-32	51	1 1/2	60,3	44	58	132	224	17.450K-24-32	123	168
17.450-32-32	51	2	71,4	44	55	131	223	17.450K-32-32	115	160
17.450-40-32	51	2 1/2	84,1	44	58	132	224	17.450K-40-32	123	168
17.450-48-32	51	3	101,6	44	75	151	243	17.450K-48-32	132	177
17.450-24-36	60	1 1/2	60,3	53	56	101	193	17.450K-24-36	108	153
17.450-32-36	60	2	71,4	53	45	86	178	17.450K-32-36	96	141
17.450-40-36	60	2 1/2	84,1	53	45	89	181	17.450K-40-36	96	141
17.450-48-36	60	3	101,6	53	53	97	189	17.450K-48-36	104	149
17.450-56-36	60	3 1/2	114,3	53	61	105	197	17.450K-56-36	112	157
17.450-32-48	76	2	71,4	69	74	142	234	17.450K-32-48	147	192
17.450-40-48	76	2 1/2	84,1	69	55	117	209	17.450K-40-48	124	169
17.450-48-48	76	3	101,6	69	53	121	213	17.450K-48-48	128	173
17.450-56-48	76	3 1/2	114,3	69	74	140	232	17.450K-56-48	147	192
17.450-64-48	76	4	127,0	69	66	160	252	17.450K-64-48	150	194
17.450-40-56	90	2 1/2	84,1	82	75	150	242	17.450K-40-56	157	202
17.450-48-56	90	3	101,6	82	70	145	237	17.450K-48-56	152	197
17.450-56-56	90	3 1/2	114,3	82	49	124	216	17.450K-56-56	128	173
17.450-64-56	90	4	127,0	82	67	136	228	17.450K-64-56	143	188
17.450-80-56	90	5	152,4	82	86	195	287	17.450K-80-56	202	247
17.450-48-64	102	3	101,6	94	87	168	260	17.450K-48-64	172	220
17.450-56-64	102	3 1/2	114,3	94	73	157	249	17.450K-56-64	161	209
17.450-64-64	102	4	127,0	94	55	139	231	17.450K-64-64	143	191
17.450-80-64	102	5	152,4	94	86	178	270	17.450K-80-64	182	230
17.450-56-96	152	3 1/2	114,3	142	94	205	333	17.450K-56-96	213	293
17.450-64-96	152	4	127,0	142	96	207	335	17.450K-64-96	215	295
17.450-80-96	152	5	152,4	142	92	243	371	17.450K-80-96	251	175

Dietzel Hydraulik GmbH
Leedenstraße 10
04626 Löbichau

Tel.: +49 (36602) 140-140

E-Mail: vertrieb@dietzel-hydraulik.de

Suction and low-pressure fittings

SFL 90°

Updated at:
24.05.2022

Connection
SAE flange 3000PSI (L series)

Standard
ISO 6162-1

Application
14A / 17A flexible tubes

Material
Steel

Surface protection
Zinc-electroplated

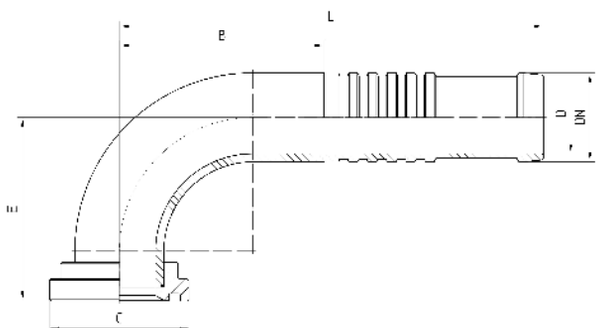

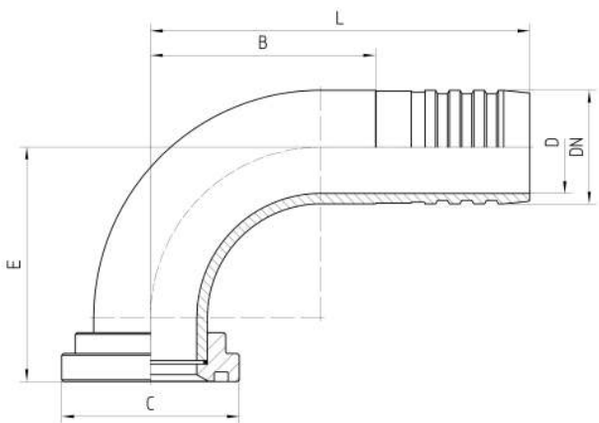

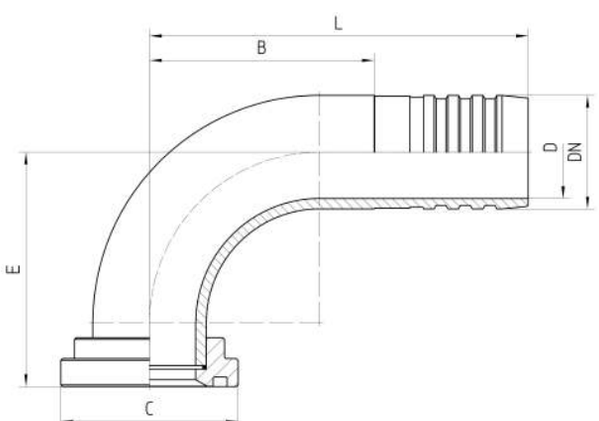

Order no.	DN in mm	flange in inch	C in mm	D in mm	E±3 in mm	B±3 in mm	L±3 in mm	Order-No.	B±3 in mm	L±3 in mm
17.470-08-12	19	1/2	30,2	14	57	47	127	17.470K-08-12	50	94
17.470-12-12	19	3/4	38,1	14	57	47	127	17.470K-12-12	50	94
17.470-16-12	19	1	44,4	14	57	47	127	17.470K-16-12	50	94
17.470-20-12	19	1 1/4	50,8	14	57	47	127	17.470K-20-12	50	94
17.470-12-16	25	3/4	38,1	19	63	59	139	17.470K-12-16	56	100
17.470-16-16	25	1	44,4	19	57	59	139	17.470K-16-16	56	100
17.470-20-16	25	1 1/4	50,8	19	54	59	139	17.470K-20-16	56	100

Dietzel Hydraulik GmbH
Leedenstraße 10
04626 Löbichau

Tel.: +49 (36602) 140-140

E-Mail: vertrieb@dietzel-hydraulik.de

Order no.	DN in mm	flange in inch	C in mm	D in mm	E±3 in mm	B±3 in mm	L±3 in mm	Order-No.	B±3 in mm	L±3 in mm
17.470-24-16	25	1 1/2	60,3	19	58	59	139	17.470K-24-16	56	100
17.470-12-20	31	3/4	38,1	26	90	75	155	17.470K-12-20	62	106
17.470-16-20	31	1	44,4	26	72	75	155	17.470K-16-20	62	106
17.470-20-20	31	1 1/4	50,8	26	67	75	155	17.470K-20-20	62	106
17.470-24-20	31	1 1/2	60,3	26	68	75	155	17.470K-24-20	62	106
17.470-32-20	31	2	71,4	26	96	75	155	17.470K-32-20	62	106
17.470-16-24	38	1	44,4	32	87	90	170	17.470K-16-24	71	115
17.470-20-24	38	1 1/4	50,8	32	87	90	170	17.470K-20-24	71	115
17.470-24-24	38	1 1/2	60,3	32	78	90	170	17.470K-24-24	71	115
17.470-32-24	38	2	71,4	32	95	90	170	17.470K-32-24	71	115
17.470-40-24	38	2 1/2	84,1	32	118	90	170	17.470K-40-24	71	115
17.470-20-32	51	1 1/4	50,8	44	117	128	220	17.470K-20-32	121	166
17.470-24-32	51	1 1/2	60,3	44	117	128	220	17.470K-24-32	121	166
17.470-32-32	51	2	71,4	44	117	128	220	17.470K-32-32	121	166
17.470-40-32	51	2 1/2	84,1	44	108	128	220	17.470K-40-32	121	166
17.470-48-32	51	3	101,6	44	110	128	220	17.470K-48-32	121	166
17.470-24-36	60	1 1/2	60,3	53	127	89	181	17.470K-24-36	96	141
17.470-32-36	60	2	71,4	53	108	89	181	17.470K-32-36	96	141
17.470-40-36	60	2 1/2	84,1	53	110	89	181	17.470K-40-36	96	141
17.470-48-36	60	3	101,6	53	120	89	181	17.470K-48-36	96	141
17.470-56-36	60	3 1/2	114,3	53	145	89	181	17.470K-56-36	96	141
17.470-32-48	76	2	71,4	69	160	123	215	17.470K-32-48	130	175
17.470-40-48	76	2 1/2	84,1	69	130	123	215	17.470K-40-48	130	175
17.470-48-48	76	3	101,6	69	130	123	215	17.470K-48-48	130	175
17.470-56-48	76	3 1/2	114,3	69	160	162	254	17.470K-56-48	149	194
17.470-64-48	76	4	127,0	69	160	163	255	17.470K-64-48	150	195
17.470-40-56	90	2 1/2	84,1	82	175	142	234	17.470K-40-56	149	194
17.470-48-56	90	3	101,6	82	165	142	234	17.470K-48-56	149	194
17.470-56-56	90	3 1/2	114,3	82	136	142	234	17.470K-56-56	149	194
17.470-64-56	90	4	127,0	82	160	142	234	17.470K-64-56	149	194
17.470-80-56	90	5	152,4	82	204	142	234	17.470K-80-56	149	194
17.470-48-64	102	3	101,6	94	200	161	253	17.470K-48-64	165	213
17.470-56-64	102	3 1/2	114,3	94	186	161	253	17.470K-56-64	165	213
17.470-64-64	102	4	127,0	94	160	161	253	17.470K-64-64	165	213
17.470-80-64	102	5	152,4	94	204	161	253	17.470K-80-64	165	213
17.470-56-96	152	3 1/2	114,3	142	265	222	350	17.470K-56-96	230	310
17.470-64-96	152	4	127,0	142	200	316	444	17.470K-64-96	230	310
17.470-80-96	152	5	152,4	142	243	222	350	17.470K-80-96	230	310

Dietzel Hydraulik GmbH
Leedenstraße 10
04626 Löbichau

Tel.: +49 (36602) 140-140

E-Mail: vertrieb@dietzel-hydraulik.de

Suction and low-pressure fittings

fixed DIN flange straight

Updated at:
24.05.2022

Connection
DIN flange fixed

Standard
DIN 2633/2527 (new: EN1092-1, Typ 11 PN16 and Typ 05 PN16)

Application
14A / 17A flexible tubes

Material
Steel

Surface protection
Zinc-electroplated

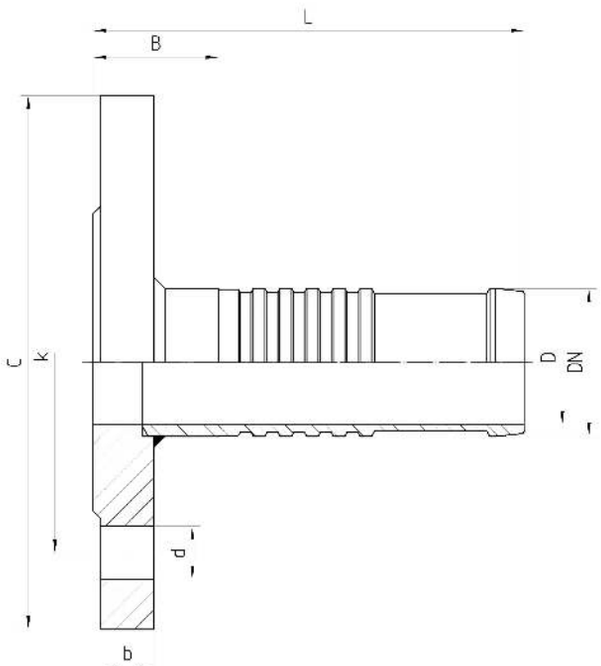

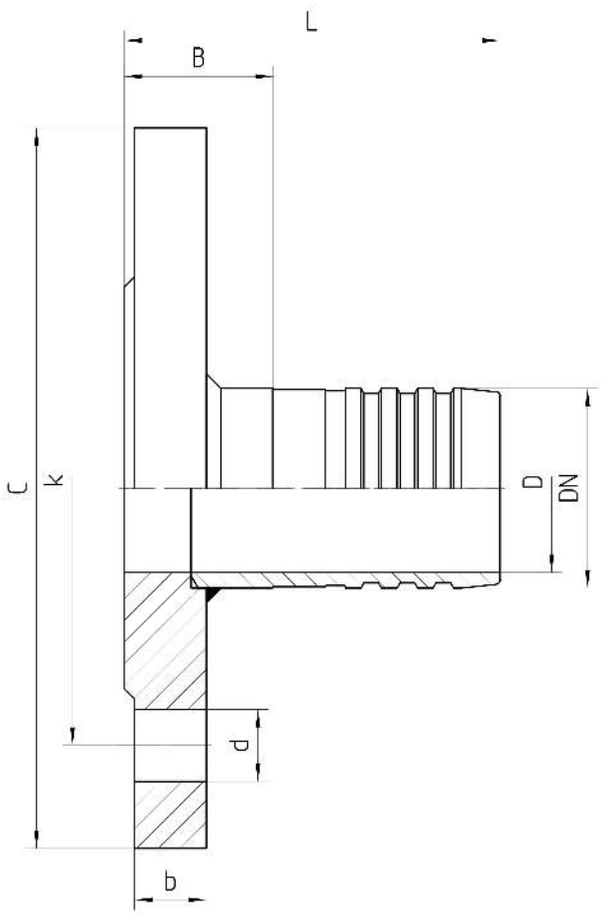

Dietzel Hydraulik GmbH
Leedenstraße 10
04626 Löbichau

Tel.: +49 (36602) 140-140

E-Mail: vertrieb@dietzel-hydraulik.de

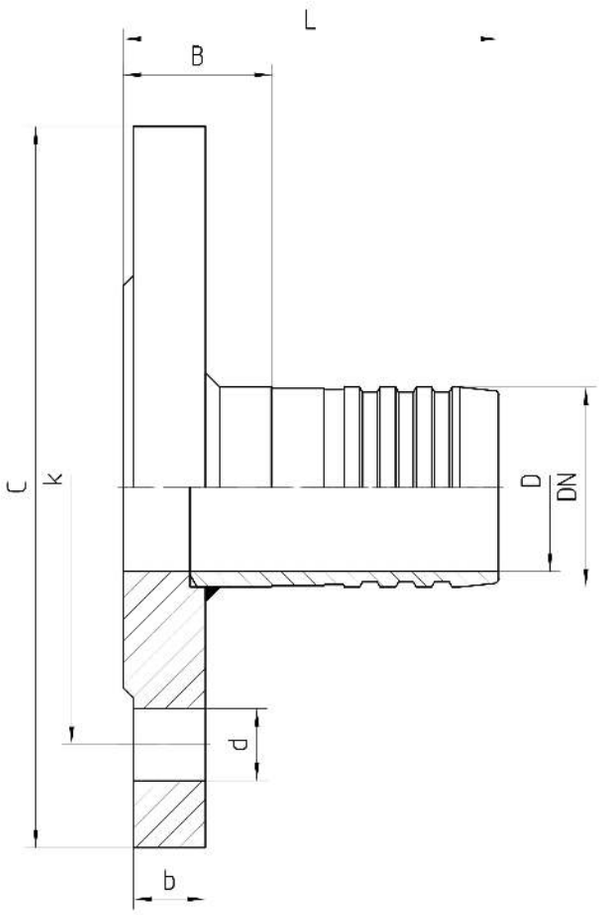

Order no.	DN in mm	DN DIN-Flange	C in mm	b in mm	k in mm	number of screws	screws T	d in mm	D in mm	B±3 mm	L±3 mm	Order No.	B±3 mm	L±3 mm
17.424-12	19	20	105	16 (18)	75	4	M12	14	14	33 (35)	113 (115)	17.424K-1	29 (31)	73 (75)
17.424-16	19	25	115	16 (18)	85	4	M12	14	14	34 (36)	114 (116)	17.424K-1	30 (32)	74 (76)
17.424-12	25	20	105	16 (18)	75	4	M12	14	19	33 (35)	113 (115)	17.424K-1	29 (31)	73 (75)
17.424-16	25	25	115	16 (18)	85	4	M12	14	19	34 (36)	114 (116)	17.424K-1	30 (32)	74 (76)
17.424-20	25	32	140	16 (18)	100	4	M16	18	19	33 (35)	113 (115)	17.424K-2	29 (31)	73 (75)
17.424-12	31	20	105	16 (18)	75	4	M12	14	26	33 (35)	113 (115)	17.424K-1	29 (31)	73 (75)
17.424-16	31	25	115	16 (18)	85	4	M12	14	26	34 (36)	114 (116)	17.424K-1	30 (32)	74 (76)
17.424-20	31	32	140	16 (18)	100	4	M16	18	26	33 (35)	113 (115)	17.424K-2	29 (31)	73 (75)
17.424-24	31	40	150	16 (18)	110	4	M16	18	26	34 (36)	114 (116)	17.424K-2	30 (32)	74 (76)
17.424-12	38	20	105	16 (18)	75	4	M12	14	32	33 (35)	113 (115)	17.424K-1	29 (31)	73 (75)
17.424-16	38	25	115	16 (18)	85	4	M12	14	32	34 (36)	114 (116)	17.424K-1	30 (32)	74 (76)
17.424-20	38	32	140	16 (18)	100	4	M16	18	32	33 (35)	113 (115)	17.424K-2	34 (36)	73 (75)

Dietzel Hydraulik GmbH
Leedenstraße 10
04626 Löbichau

Tel.: +49 (36602) 140-140

E-Mail: vertrieb@dietzel-hydraulik.de

Order no.	DN in mm	DN DIN-Flange	C in mm	b in mm	k in mm	number of screws	screws T	d in mm	D in mm	B±3 mm	L±3 mm	Order No.	B±3 mm	L±3 mm
17.424-24	38	40	150	16 (18)	110	4	M16	18	32	34 (36)	114 (116)	17.424K-2	30 (32)	74 (76)
17.424-32	38	50	165	18	125	4	M16	18	32	55	135	17.424K-3	31	75
17.424-16	51	25	115	16 (18)	85	4	M12	14	44	45 (47)	137 (139)	17.424K-1	52 (54)	97 (99)
17.424-20	51	32	140	16 (18)	100	4	M16	18	44	31 (33)	123 (125)	17.424K-2	38 (40)	83 (85)
17.424-24	51	40	150	16 (18)	110	4	M16	18	44	32 (34)	124 (126)	17.424K-2	39 (41)	84 (86)
17.424-32	51	50	165	18	125	4	M16	18	44	33	125	17.424K-3	35	80
17.424-40	51	65	185	18	145	4 (8)	M16	18	44	34	126	17.424K-4	41	86
17.424-16	60	25	115	16 (18)	85	4	M12	14	53	82 (84)	174 (176)	17.424K-1	89 (91)	134 (136)
17.424-20	60	32	140	16 (18)	100	4	M16	18	53	44 (46)	136 (138)	17.424K-2	51 (53)	96 (98)
17.424-24	60	40	150	16 (18)	110	4	M16	18	53	42 (44)	134 (136)	17.424K-2	49 (51)	94 (96)
17.424-32	60	50	165	18	125	4	M16	18	53	43	135	17.424K-3	50	95
17.424-40	60	65	185	18	145	4 (8)	M16	18	53	44	136	17.424K-4	51	96
17.424-48	60	80	200	20	160	8	M16	18	53	45	137	17.424K-4	52	97
17.424-20	76	32	140	16 (18)	100	4	M16	18	69	81 (83)	173 (175)	17.424K-2	88 (90)	133 (135)
17.424-24	76	40	150	16 (18)	110	4	M16	18	69	70 (72)	162 (164)	17.424K-2	77 (79)	122 (124)
17.424-32	76	50	165	18	125	4	M16	18	69	66	158	17.424K-3	63	108
17.424-40	76	65	185	18	145	4 (8)	M16	18	69	53	145	17.424K-4	60	105
17.424-48	76	80	200	20	160	8	M16	18	69	55	147	17.424K-4	62	107
17.424-64	76	100	220	20	180	8	M16	18	69	64	156	17.424K-6	62	107
17.424-24	90	40	150	16 (18)	110	4	M16	18	82	77 (79)	169 (171)	17.424K-2	84 (86)	129 (131)
17.424-32	90	50	165	18	125	4	M16	18	82	56	148	17.424K-3	63	108
17.424-40	90	65	185	18	145	4 (8)	M16	18	82	56	148	17.424K-4	63	108
17.424-48	90	80	200	20	160	8	M16	18	82	55	147	17.424K-4	62	107
17.424-64	90	100	220	20	180	8	M16	18	82	57	149	17.424K-6	64	109
17.424-32	102	50	165	18	125	4	M16	18	94	134	226	17.424K-3	87	135
17.424-40	102	65	185	18	145	4 (8)	M16	18	94	66	158	17.424K-4	70	118
17.424-48	102	80	200	20	160	8	M16	18	94	45	137	17.424K-4	49	97
17.424-64	102	100	220	20	180	8	M16	18	94	67	159	17.424K-6	71	119
17.424-80	102	125	250	22	210	8	M16	18	94	67	159	17.424K-8	71	119
17.424-64	152	100	220	20	180	8	M16	18	142	182	310	17.424K-6	109	189
17.424-80	152	125	250	22	210	8	M16	18	142	54	182	17.424K-8	62	142
17.424-96	152	150	285	22	240	8	M20	22	142	54	182	17.424K-9	62	142
17.424-12	152	200	340	24	295	12	M20	22	142	56	184	17.424K-1	64	144

Note
deviating measurements when En flanges are used

Dietzel Hydraulik GmbH
Leedenstraße 10
04626 Löbichau

Tel.: +49 (36602) 140-140

E-Mail: vertrieb@dietzel-hydraulik.de

Suction and low-pressure fittings

fixed DIN flange 45°

Updated at:
24.05.2022

Connection
DIN flange fixed

Standard
DIN 2633/2527 (new: EN1092-1, Typ 11 PN16 and Typ 05 PN16)

Application
14A / 17A flexible tubes

Material
Steel

Surface protection
Zinc-electroplated

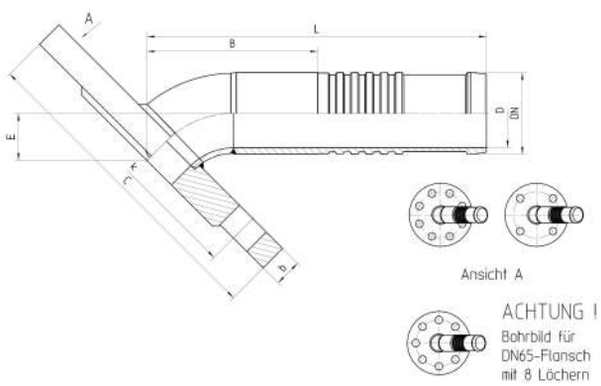

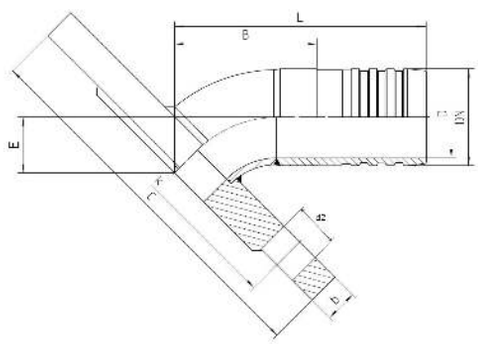

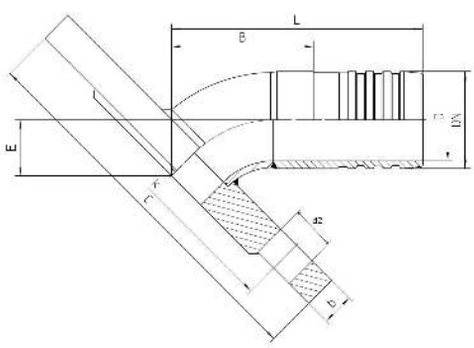

Order no.	DN in mm	DN DIN-Flange	C in mm	b in mm	k in mm	number of screws	screws T	d in mm	D in mm	E±3 mm	B±3 mm	L±3 mm	Order No.	B±3 mm	L±3 mm
17.425-12	19	20	105	16 (18)	75	4	M12	14	14	20 (21)	112 (113)	192 (193)	17.425K-1	108 (109)	152 (153)
17.425-16	19	25	115	16 (18)	85	4	M12	14	14	20 (21)	112 (113)	192 (193)	17.425K-1	108 (109)	152 (153)
17.425-12	25	20	105	16 (18)	75	4	M12	14	19	22 (23)	122 (123)	202 (203)	17.425K-1	118 (119)	162 (163)
17.425-16	25	25	115	16 (18)	85	4	M12	14	19	22 (23)	122 (123)	202 (203)	17.425K-1	118 (119)	162 (163)
17.425-20	25	32	140	16 (18)	100	4	M16	18	19	22 (23)	132 (133)	212 (213)	17.425K-2	128 (129)	172 (173)
17.425-12	31	20	105	16 (18)	75	4	M12	14	26	22 (23)	76 (77)	156 (157)	17.425K-1	72 (73)	116 (117)
17.425-16	31	25	115	16 (18)	85	4	M12	14	26	22 (23)	76 (77)	156 (157)	17.425K-1	72 (73)	116 (117)

Dietzel Hydraulik GmbH
Leedenstraße 10
04626 Löbichau

Tel.: +49 (36602) 140-140

E-Mail: vertrieb@dietzel-hydraulik.de

Order no.	DN in mm	DN DIN-Flange	C in mm	b in mm	k in mm	number of screws	screws T	d in mm	D in mm	E±3 mm	B±3 mm	L±3 mm	Order No.	B±3 mm	L±3 mm
17.425-20	31	32	140	16 (18)	100	4	M16	18	26	22 (23)	86 (87)	166 (167)	17.425K-2	82 (83)	126 (127)
17.425-24	31	40	150	16 (18)	110	4	M16	18	26	27 (28)	87 (88)	167 (168)	17.425K-2	83 (84)	127 (128)
17.425-12	38	20	105	16 (18)	75	4	M12	14	32	22 (23)	74 (75)	154 (155)	17.425K-1	70 (71)	114 (115)
17.425-16	38	25	115	16 (18)	85	4	M12	14	32	22 (23)	74 (75)	154 (155)	17.425K-1	70 (71)	114 (115)
17.425-20	38	32	140	16 (18)	100	4	M16	18	32	22 (23)	86 (87)	166 (167)	17.425K-2	81 (83)	126 (127)
17.425-24	38	40	150	16 (18)	110	4	M16	18	32	22 (23)	83 (84)	163 (164)	17.425K-2	83 (84)	127 (128)
17.425-32	38	50	165	18	125	4	M16	18	32	34	103	183	17.425K-3	99	143
17.425-16	51	25	115	16 (18)	85	4	M12	14	44	22 (23)	74 (75)	166 (167)	17.425K-1	81 (82)	126 (127)
17.425-20	51	32	140	16 (18)	100	4	M16	18	44	27 (28)	69 (70)	161(162)	17.425K-2	76 (77)	121 (122)
17.425-24	51	40	150	16 (18)	110	4	M16	18	44	27 (28)	69 (70)	161(162)	17.425K-2	76 (77)	121 (122)
17.425-32	51	50	165	18	125	4	M16	18	44	34	93	185	17.425K-3	100	145
17.425-40	51	65	185	18	145	4 (8)	M16	18	44	37	103	195	17.425K-4	110	155
17.425-16	60	25	115	16 (18)	85	4	M12	14	53	22 (23)	77 (78)	169 (170)	17.425K-1	84 (85)	129 (130)
17.425-20	60	32	140	16 (18)	100	4	M16	18	53	27 (28)	81 (82)	173 (174)	17.425K-2	88 (89)	133 (134)
17.425-24	60	40	150	16 (18)	110	4	M16	18	53	34 (35)	93 (94)	185 (186)	17.425K-2	89 (90)	134 (135)
17.425-32	60	50	165	18	125	4	M16	18	53	34	93	185	17.425K-3	100	145
17.425-40	60	65	185	18	145	4 (8)	M16	18	53	37	100	192	17.425K-4	107	152
17.425-48	60	80	200	20	160	8	M16	18	53	50	118	210	17.425K-4	125	170
17.425-20	76	32	140	16 (18)	100	4	M16	18	69	27 (28)	106 (107)	198 (199)	17.425K-2	113 (114)	158 (159)
17.425-24	76	40	150	16 (18)	110	4	M16	18	69	34 (35)	116 (117)	208 (209)	17.425K-2	123 (124)	168 (169)
17.425-32	76	50	165	18	125	4	M16	18	69	37	120	212	17.425K-3	127	172
17.425-40	76	65	185	18	145	4 (8)	M16	18	69	50	105	197	17.425K-4	112	157
17.425-48	76	80	200	20	160	8	M16	18	69	37	105	197	17.425K-4	112	157
17.425-64	76	100	220	20	180	8	M16	18	69	58	121	213	17.425K-6	128	173
17.425-24	90	40	150	16 (18)	110	4	M16	18	82	37 (38)	125 (126)	217 (218)	17.425K-2	132 (131)	177 (176)
17.425-32	90	50	165	18	125	4	M16	18	82	50	123	215	17.425K-3	130	175
17.425-40	90	65	185	18	145	4 (8)	M16	18	82	50	123	215	17.425K-4	130	175
17.425-48	90	80	200	20	160	8	M16	18	82	45	118	210	17.425K-4	138	183
17.425-64	90	100	220	20	180	8	M16	18	82	69	152	244	17.425K-6	160	205
17.425-32	102	50	165	18	125	4	M16	18	94	50	145	237	17.425K-3	149	197
17.425-40	102	65	185	18	145	4 (8)	M16	18	94	50	145	237	17.425K-4	149	197
17.425-48	102	80	200	20	160	8	M16	18	94	60	119	211	17.425K-4	123	171
17.425-64	102	100	220	20	180	8	M16	18	94	48	134	226	17.425K-6	149	197

Dietzel Hydraulik GmbH
Leedenstraße 10
04626 Löbichau

Tel.: +49 (36602) 140-140

E-Mail: vertrieb@dietzel-hydraulik.de

Order no.	DN in mm	DN DIN-Flange	C in mm	b in mm	k in mm	number of screws	screws T	d in mm	D in mm	E±3 mm	B±3 mm	L±3 mm	Order No.	B±3 mm	L±3 mm
17.425-80	102	125	250	22	210	8	M16	18	94	69	175	267	17.425K-8	179	227
17.425-64	152	100	220	20	180	8	M16	18	142	56	280	408	17.425K-6	167	247
17.425-80	152	125	250	22	210	8	M16	18	142	72	197	325	17.425K-8	188	268
17.425-96	152	150	285	22	240	8	M20	22	142	78	197	325	17.425K-9	160	240
17.425-12	152	200	340	24	295	12	M20	22	142	97	182	310	17.425K-1	190	270

Note
deviating measurements when En flanges are used

Dietzel Hydraulik GmbH
Leedenstraße 10
04626 Löbichau

Tel.: +49 (36602) 140-140

E-Mail: vertrieb@dietzel-hydraulik.de

Suction and low-pressure fittings

fixed DIN flange 90°

Updated at:
24.05.2022

Connection
DIN flange fixed

Standard
DIN 2633/2527 (new: EN1092-1, Typ 11 PN16 and Typ 05 PN16)

Application
14A / 17A flexible tubes

Material
Steel

Surface protection
Zinc-electroplated

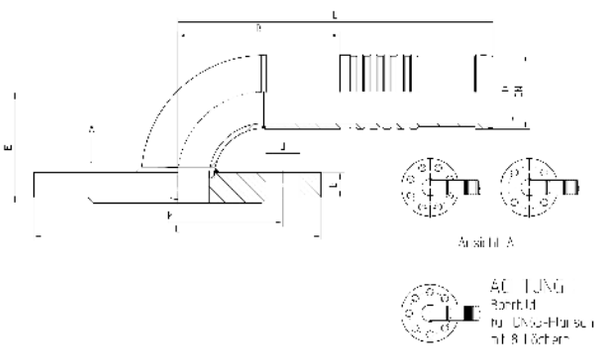

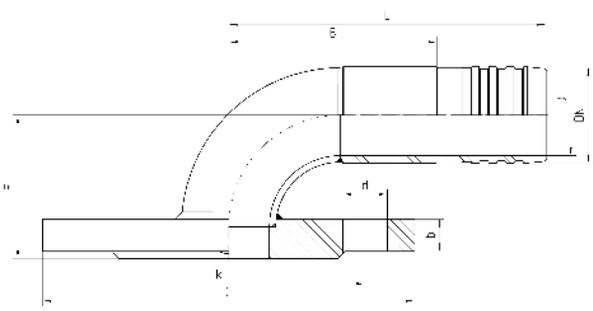

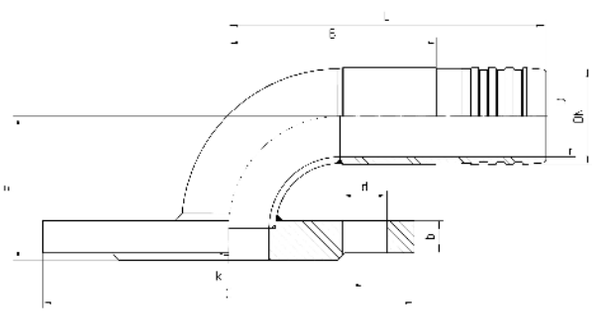

Order no.	DN in mm	DN DIN-Flange	C in mm	b in mm	k in mm	number of screws	screws T	d in mm	D in mm	E±3 mm	B±3 in mm	L±3 in mm	Order No.	B±3 in mm	L±3 in mm
17.429-12	19	20	105	16 (18)	75	4	M12	14	14	51 (53)	80	160	17.429K-1	76	120
17.429-16	19	25	115	16 (18)	85	4	M12	14	14	51 (53)	90	170	17.429K-1	86	130
17.429-12	25	20	105	16 (18)	75	4	M12	14	19	51 (53)	59	139	17.429K-1	71	115
17.429-16	25	25	115	16 (18)	85	4	M12	14	19	51 (53)	59	139	17.429K-1	81	125
17.429-20	25	32	140	16 (18)	100	4	M16	18	19	50 (52)	59	139	17.429K-2	81	125
17.429-12	31	20	105	16 (18)	75	4	M12	14	26	51 (53)	75	155	17.429K-1	71	115
17.429-16	31	25	115	16 (18)	85	4	M12	14	26	51 (53)	75	155	17.429K-1	71	115
17.429-20	31	32	140	16 (18)	100	4	M16	18	26	60 (62)	95	175	17.429K-2	81	125

Dietzel Hydraulik GmbH
Leedenstraße 10
04626 Löbichau

Tel.: +49 (36602) 140-140

E-Mail: vertrieb@dietzel-hydraulik.de

Order no.	DN in mm	DN DIN-Flange	C in mm	b in mm	k in mm	number of screws	screws T	d in mm	D in mm	E±3 mm	B±3 in mm	L±3 in mm	Order No.	B±3 in mm	L±3 in mm
17.429-24	31	40	150	16 (18)	110	4	M16	18	26	62 (64)	95	175	17.429K-2	91	135
17.429-12	38	20	105	16 (18)	75	4	M12	14	32	51 (53)	75	155	17.429K-1	71	115
17.429-16	38	25	115	16 (18)	85	4	M12	14	32	51 (53)	75	155	17.429K-1	71	115
17.429-20	38	32	140	16 (18)	100	4	M16	18	32	60 (62)	85	165	17.429K-2	81	125
17.429-24	38	40	150	16 (18)	110	4	M16	18	32	62 (64)	85	165	17.429K-2	81	125
17.429-32	38	50	165	18	125	4	M16	18	32	69	101	181	17.429K-3	97	141
17.429-16	51	25	115	16 (18)	85	4	M12	14	44	61 (63)	83	175	17.429K-1	90	135
17.429-20	51	32	140	16 (18)	100	4	M16	18	44	67 (69)	89	181	17.429K-2	96	141
17.429-24	51	40	150	16 (18)	110	4	M16	18	44	80 (82)	91	183	17.429K-2	98	143
17.429-32	51	50	165	18	125	4	M16	18	44	82	91	183	17.429K-3	98	143
17.429-40	51	65	185	18	145	4 (8)	M16	18	44	94	104	196	17.429K-4	111	156
17.429-16	60	25	115	16 (18)	85	4	M12	14	53	68 (70)	86	178	17.429K-1	93	138
17.429-20	60	32	140	16 (18)	100	4	M16	18	53	80 (82)	90	182	17.429K-2	97	142
17.429-24	60	40	150	16 (18)	110	4	M16	18	53	82 (84)	90	182	17.429K-2	97	142
17.429-32	60	50	165	18	125	4	M16	18	53	94	104	196	17.429K-3	96	141
17.429-40	60	65	185	18	145	4 (8)	M16	18	53	95	104	196	17.429K-4	111	156
17.429-48	60	80	200	20	160	8	M16	18	53	145	123	215	17.429K-4	130	175
17.429-20	76	32	140	16 (18)	100	4	M16	18	69	80 (82)	121	213	17.429K-2	128	173
17.429-24	76	40	150	16 (18)	110	4	M16	18	69	82 (84)	121	213	17.429K-2	128	173
17.429-32	76	50	165	18	125	4	M16	18	69	94	124	216	17.429K-3	111	156
17.429-40	76	65	185	18	145	4 (8)	M16	18	69	113	123	215	17.429K-4	130	175
17.429-48	76	80	200	20	160	8	M16	18	69	145	123	215	17.429K-4	130	175
17.429-64	76	100	220	20	180	8	M16	18	69	133	162	254	17.429K-6	148	193
17.429-24	90	40	150	16 (18)	110	4	M16	18	82	123 (125)	139	231	17.429K-2	146	191
17.429-32	90	50	165	18	125	4	M16	18	82	118	125	217	17.429K-3	140	185
17.429-40	90	65	185	18	145	4 (8)	M16	18	82	114	133	225	17.429K-4	140	185
17.429-48	90	80	200	20	160	8	M16	18	82	135	143	235	17.429K-4	150	195
17.429-64	90	100	220	20	180	8	M16	18	82	137	143	235	17.429K-6	160	205
17.429-32	102	50	165	18	125	4	M16	18	94	113	163	255	17.429K-3	167	215
17.429-40	102	65	185	18	145	4 (8)	M16	18	94	138	163	255	17.429K-4	167	215
17.429-48	102	80	200	20	160	8	M16	18	94	154	162	254	17.429K-4	166	214
17.429-64	102	100	220	20	180	8	M16	18	94	155	162	254	17.429K-6	166	214
17.429-80	102	125	250	22	210	8	M16	18	94	155	162	254	17.429K-8	166	214

Dietzel Hydraulik GmbH
Leedenstraße 10
04626 Löbichau

Tel.: +49 (36602) 140-140

E-Mail: vertrieb@dietzel-hydraulik.de

Order no.	DN in mm	DN DIN-Flange	C in mm	b in mm	k in mm	number of screws	screws T	d in mm	D in mm	E±3 mm	B±3 in mm	L±3 in mm	Order No.	B±3 in mm	L±3 in mm
17.429-64	152	100	220	20	180	8	M16	18	142	208	262	390	17.429K-6	191	271
17.429-80	152	125	250	22	210	8	M16	18	142	212	225	353	17.429K-8	233	313
17.429-96	152	150	285	22	240	8	M20	22	142	238	249	377	17.429K-9	244	324
17.429-12	152	200	340	24	295	12	M20	22	142	240	248	376	17.429K-1	246	326

Note
deviating measurements when En flanges are used

Dietzel Hydraulik GmbH
Leedenstraße 10
04626 Löbichau

Tel.: +49 (36602) 140-140

E-Mail: vertrieb@dietzel-hydraulik.de

Suction and low-pressure fittings

loose DIN flange straight

Updated at:
24.05.2022

Connection
loose DIN flange

Standard
DIN 2673 (new: EN1092-1, Typ 04 PN16 and Typ 34 PN16)

Application
14A / 17A flexible tubes

Material
Steel

Surface protection
Zinc-electroplated

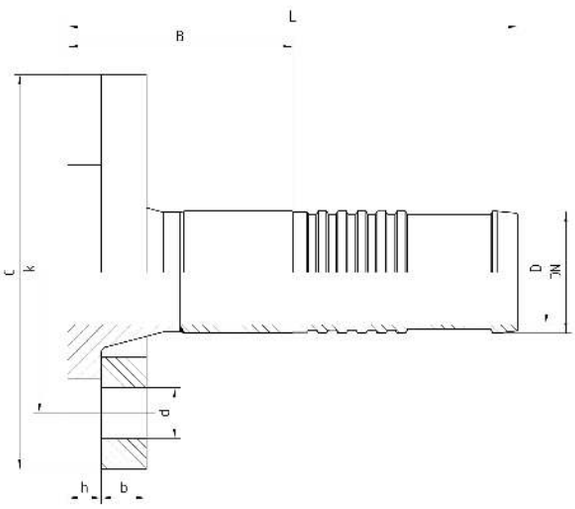

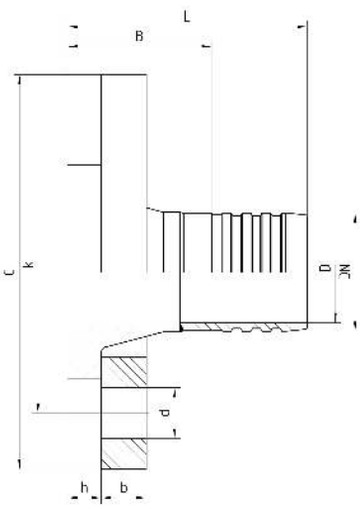

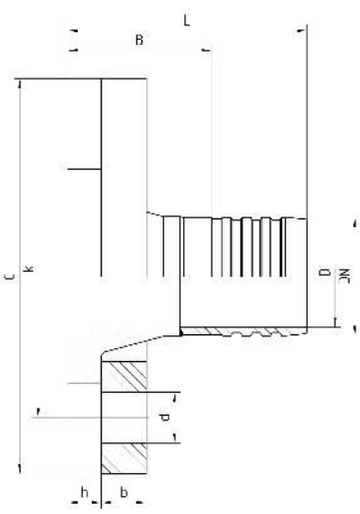

Dietzel Hydraulik GmbH
Leedenstraße 10
04626 Löbichau

Tel.: +49 (36602) 140-140

E-Mail: vertrieb@dietzel-hydraulik.de

Order no.	DN in mm	DN DIN-Flange	C in mm	b in mm	k in mm	number of screws	screws T	d in mm	h in mm	D in mm	B±3 in mm	L±3 in mm	Order No.	B±3 in mm	L±3 in mm
17.434-12	19	20	105	14 (16)	75	4	M12	14	12 (14)	14	60	140	17.434K-1	56	100
17.434-16	19	25	115	16	85	4	M12	14	12 (14)	14	90	170	17.434K-1	86	130
17.434-12	25	20	105	14 (16)	75	4	M12	14	12 (14)	19	60	140	17.434K-1	56	100
17.434-16	25	25	115	16	85	4	M12	14	12 (14)	19	60	140	17.434K-1	56	100
17.434-20	25	32	140	16 (18)	100	4	M16	18	12 (14)	19	60 (62)	140 (142)	17.434K-2	56 (58)	100 (102)
17.434-12	31	20	105	14 (16)	75	4	M12	14	12 (14)	26	60	140	17.434K-1	56	100
17.434-16	31	25	115	16	85	4	M12	14	12 (14)	26	60	140	17.434K-1	56	100
17.434-20	31	32	140	16 (18)	100	4	M16	18	12 (14)	26	60 (62)	140 (142)	17.434K-2	56 (58)	100 (102)
17.434-24	31	40	150	16 (18)	110	4	M16	18	12 (14)	26	60 (65)	140 (145)	17.434K-2	56 (61)	100 (105)
17.434-12	38	20	105	14 (16)	75	4	M12	14	12 (14)	32	90	170	17.434K-1	86	130
17.434-16	38	25	115	16	85	4	M12	14	12 (14)	32	90	170	17.434K-1	86	130
17.434-20	38	32	140	16 (18)	100	4	M16	18	12 (14)	32	60 (62)	140 (142)	17.434K-2	56 (58)	100 (102)
17.434-24	38	40	150	16 (18)	110	4	M16	18	12 (14)	32	60 (65)	140 (145)	17.434K-2	56 (61)	100 (105)
17.434-32	38	50	165	16 (20)	125	4	M16	18	14 (16)	32	80	160	17.434K-3	76	120
17.434-16	51	25	115	16	85	4	M12	14	12 (14)	44	98	190	17.434K-1	105	150
17.434-20	51	32	140	16 (18)	100	4	M16	18	12 (14)	44	68 (70)	160 (162)	17.434K-2	75 (77)	120 (122)
17.434-24	51	40	150	16 (18)	110	4	M16	18	12 (14)	44	53 (58)	145 (150)	17.434K-2	60 (65)	105 (110)
17.434-32	51	50	165	16 (20)	125	4	M16	18	14 (16)	44	63	155	17.434K-3	65	110
17.434-40	51	65	185	16 (20)	145	4 (8)	M16	18	14 (16)	44	68	160	17.434K-4	85	130
17.434-16	60	25	115	16	85	4	M12	14	12 (14)	53	93	185	17.434K-1	100	145
17.434-20	60	32	140	16 (18)	100	4	M16	18	12 (14)	53	78 (80)	170 (172)	17.434K-2	85 (87)	130 (132)
17.434-24	60	40	150	16 (18)	110	4	M16	18	12 (14)	53	68 (73)	160 (165)	17.434K-2	75 (80)	120 (125)
17.434-32	60	50	165	16 (20)	125	4	M16	18	14 (16)	53	58	150	17.434K-3	65	110
17.434-40	60	65	185	16 (20)	145	4 (8)	M16	18	14 (16)	53	73	165	17.434K-4	100	145
17.434-48	60	80	200	18 (20)	160	8	M16	18	16	53	78	170	17.434K-4	85	130
17.434-20	76	32	140	16 (18)	100	4	M16	18	12 (14)	69	98 (100)	190 (192)	17.434K-2	105 (107)	150 (152)
17.434-24	76	40	150	16 (18)	110	4	M16	18	12 (14)	69	98 (103)	190 (195)	17.434K-2	105 (110)	150 (155)
17.434-32	76	50	165	16 (20)	125	4	M16	18	14 (16)	69	73	165	17.434K-3	80	125
17.434-40	76	65	185	16 (20)	145	4 (8)	M16	18	14 (16)	69	73	165	17.434K-4	80	125

Dietzel Hydraulik GmbH
Leedenstraße 10
04626 Löbichau

Tel.: +49 (36602) 140-140

E-Mail: vertrieb@dietzel-hydraulik.de

Order no.	DN in mm	DN DIN-Flange	C in mm	b in mm	k in mm	number of screws	screws T	d in mm	h in mm	D in mm	B±3 in mm	L±3 in mm	Order No.	B±3 in mm	L±3 in mm
17.434-48	76	80	200	18 (20)	160	8	M16	18	16	69	78	170	17.434K-4	85	130
17.434-64	76	100	220	18 (22)	180	8	M16	18	16 (18)	69	98 (100)	190 (192)	17.434K-6	105 (107)	150 (152)
17.434-24	90	40	150	16 (18)	110	4	M16	18	12 (14)	82	116 (121)	208 (213)	17.434K-2	123 (128)	168 (173)
17.434-32	90	50	165	16 (20)	125	4	M16	18	14 (16)	82	121	213	17.434K-3	128	173
17.434-40	90	65	185	16 (20)	145	4 (8)	M16	18	14 (16)	82	85	113	17.434K-4	90	135
17.434-48	90	80	200	18 (20)	160	8	M16	18	16	82	88	180	17.434K-4	95	140
17.434-64	90	100	220	18 (22)	180	8	M16	18	16 (18)	82	86 (88)	178 (180)	17.434K-6	93 (95)	138 (140)
17.434-32	102	50	165	16 (20)	125	4	M16	18	14 (16)	94	123	215	17.434K-3	127	175
17.434-40	102	65	185	16 (20)	145	4 (8)	M16	18	14 (16)	94	113	205	17.434K-4	117	165
17.434-48	102	80	200	18 (20)	160	8	M16	18	16	94	76	168	17.434K-4	80	128
17.434-64	102	100	220	18 (22)	180	8	M16	18	16 (18)	94	78 (80)	170 (172)	17.434K-6	82 (84)	130 (132)
17.434-80	102	125	250	18 (22)	210	8	M16	18	18	94	148 (153)	240 (245)	17.434K-8	152 (157)	200 (205)
17.434-64	152	100	220	18 (22)	180	8	M16	18	16 (18)	142	215 (217)	343 (345)	17.434K-6	115 (117)	195 (197)
17.434-80	152	125	250	18 (22)	210	8	M16	18	18	142	82 (87)	210 (215)	17.434K-8	90 (95)	170 (175)
17.434-96	152	150	285	18 (24)	240	8	M20	22	18 (20)	142	82 (87)	210 (215)	17.434K-9	77 (82)	157 (162)
17.434-12	152	200	340	20 (26)	295	12	M20	22	20	142	184 (191)	312 (319)	17.434K-1	110 (117)	190 (197)

Note
deviating measurements when En flanges are used

Dietzel Hydraulik GmbH
Leedenstraße 10
04626 Löbichau

Tel.: +49 (36602) 140-140

E-Mail: vertrieb@dietzel-hydraulik.de

Suction and low-pressure fittings

loose DIN flange 45°

Updated at:
24.05.2022

Connection
loose DIN flange

Standard
DIN 2673 (new: EN1092-1, Typ 04 PN16 and Typ 34 PN16)

Application
14A / 17A flexible tubes

Material
Steel

Surface protection
Zinc-electroplated

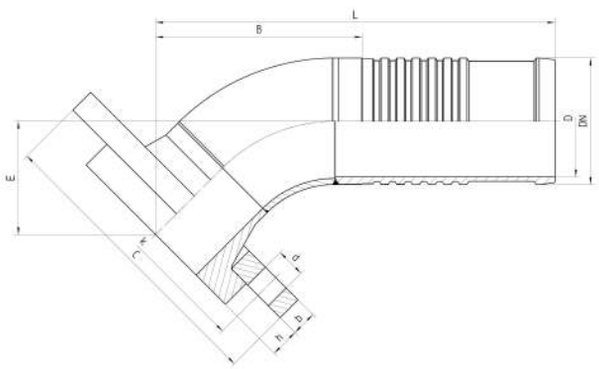

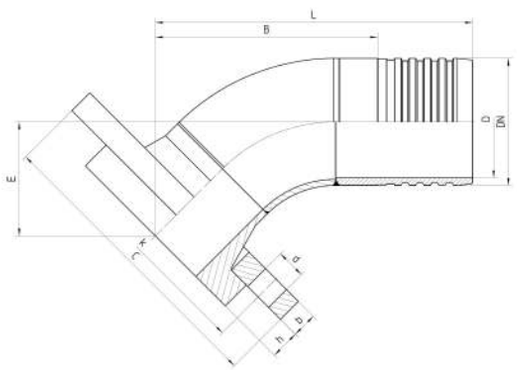

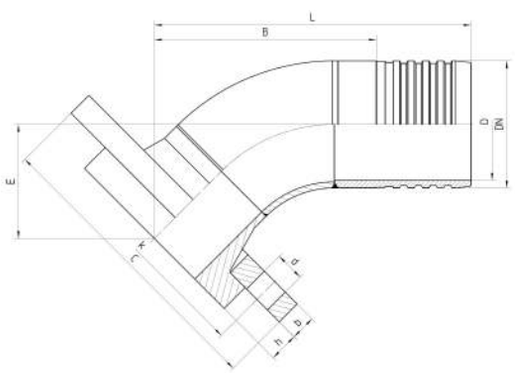

Order no.	DN in mm	DN DIN-Flange	C in mm	b in mm	k in mm	number of screws	screws T	d in mm	h in mm	D in mm	E±3 in mm	B±3 in mm	L±3 in mm	Order No.	B±3 in mm	L±3 in mm
17.435-	19	20	105	14 (16)	75	4	M12	14	12 (14)	14	37	75	155	17.435K	71	115
17.435-	19	25	115	16	85	4	M12	14	12 (14)	14	40	80	160	17.435K	76	120
17.435-	25	20	105	14 (16)	75	4	M12	14	12 (14)	19	40	80	160	17.435K	76	120
17.435-	25	25	115	16	85	4	M12	14	12 (14)	19	40	80	160	17.435K	76	120
17.435-	25	32	140	16 (18)	100	4	M16	18	12 (14)	19	43 (44)	85 (86)	165 (166)	17.435K	81 (82)	125 (126)
17.435-	31	20	105	14 (16)	75	4	M12	14	12 (14)	26	40	80	160	17.435K	76	120

Dietzel Hydraulik GmbH
Leedenstraße 10
04626 Löbichau

Tel.: +49 (36602) 140-140

E-Mail: vertrieb@dietzel-hydraulik.de

Order no.	DN in mm	DN DIN-Flange	C in mm	b in mm	k in mm	number of screws	screws T	d in mm	h in mm	D in mm	E±3 in mm	B±3 in mm	L±3 in mm	Order No.	B±3 in mm	L±3 in mm
17.435-	31	25	115	16	85	4	M12	14	12 (14)	26	40	85	165	17.435k	76	120
17.435-	31	32	140	16 (18)	100	4	M16	18	12 (14)	26	43 (44)	85 (86)	165 (166)	17.435k	81 (82)	125 (126)
17.435-	31	40	150	16 (18)	110	4	M16	18	12 (14)	26	43 (46)	90 (93)	170 (173)	17.435k	86 (89)	130 (133)
17.435-	38	20	105	14 (16)	75	4	M12	14	12 (14)	32	40	80	160	17.435k	76	120
17.435-	38	25	115	16	85	4	M12	14	12 (14)	32	40	80	160	17.435k	76	120
17.435-	38	32	140	16 (18)	100	4	M16	18	12 (14)	32	43 (44)	85 (86)	165 (166)	17.435k	81 (82)	125 (126)
17.435-	38	40	150	16 (18)	110	4	M16	18	12 (14)	32	43 (46)	85 (88)	165 (168)	17.435k	81 (82)	125 (126)
17.435-	38	50	165	16 (20)	125	4	M16	18	14 (16)	32	47	105	185	17.435k	101	145
17.435-	51	25	115	16	85	4	M12	14	12 (14)	44	40	98	190	17.435k	105	150
17.435-	51	32	140	16 (18)	100	4	M16	18	12 (14)	44	40 (41)	98 (99)	190 (191)	17.435k	105 (106)	150 (151)
17.435-	51	40	150	16 (18)	110	4	M16	18	12 (14)	44	53 (56)	83 (86)	175 (178)	17.435k	90 (93)	135 (138)
17.435-	51	50	165	16 (20)	125	4	M16	18	14 (16)	44	55	128	220	17.435k	110	155
17.435-	51	65	185	16 (20)	145	4 (8)	M16	18	14 (16)	44	55	133	225	17.435k	140	185
17.435-	60	25	115	16	85	4	M12	14	12 (14)	53	40	103	195	17.435k	110	155
17.435-	60	32	140	16 (18)	100	4	M16	18	12 (14)	53	43 (44)	101 (102)	193 (194)	17.435k	108 (109)	153 (154)
17.435-	60	40	150	16 (18)	110	4	M16	18	12 (14)	53	53 (56)	79 (82)	171 (174)	17.435k	86 (89)	131 (134)
17.435-	60	50	165	16 (20)	125	4	M16	18	14 (16)	53	55	88	180	17.435k	85	140
17.435-	60	65	185	16 (20)	145	4 (8)	M16	18	14 (16)	53	55	136	228	17.435k	143	188
17.435-	60	80	200	18 (20)	160	8	M16	18	16	53	55	141	233	17.435k	148	193
17.435-	76	32	140	16 (18)	100	4	M16	18	12 (14)	69	43 (44)	111 (112)	203 (204)	17.435k	118 (119)	163 (164)
17.435-	76	40	150	16 (18)	110	4	M16	18	12 (14)	69	53 (56)	119 (122)	211 (214)	17.435k	126 (129)	171 (174)
17.435-	76	50	165	16 (20)	125	4	M16	18	14 (16)	69	55	131	223	17.435k	138	183
17.435-	76	65	185	16 (20)	145	4 (8)	M16	18	14 (16)	69	55	128	220	17.435k	135	180
17.435-	76	80	200	18 (20)	160	8	M16	18	16	69	70	158	250	17.435k	153	198
17.435-	76	100	220	18 (22)	180	8	M16	18	16 (18)	69	70 (71)	165 (166)	257 (258)	17.435k	172 (173)	217 (218)
17.435-	90	40	150	16 (18)	110	4	M16	18	12 (14)	82	53 (56)	126 (129)	218 (221)	17.435k	133 (136)	178 (181)
17.435-	90	50	165	16 (20)	125	4	M16	18	14 (16)	82	55	138	230	17.435k	145	190

Dietzel Hydraulik GmbH
Leedenstraße 10
04626 Löbichau

Tel.: +49 (36602) 140-140

E-Mail: vertrieb@dietzel-hydraulik.de

Order no.	DN in mm	DN DIN-Flange	C in mm	b in mm	k in mm	number of screws	screws T	d in mm	h in mm	D in mm	E±3 in mm	B±3 in mm	L±3 in mm	Order No.	B±3 in mm	L±3 in mm
17.435-	90	65	185	16 (20)	145	4 (8)	M16	18	14 (16)	82	55	136	228	17.435k	143	188
17.435-	90	80	200	18 (20)	160	8	M16	18	16	82	68	148 (159)	240 (251)	17.435k	155	200
17.435-	90	100	220	18 (22)	180	8	M16	18	16 (18)	82	77 (78)	168 (169)	260 (261)	17.435k	165 (166)	210 (211)
17.435-	102	50	165	16 (20)	125	4	M16	18	14 (16)	94	55	153	245	17.435k	157	205
17.435-	102	65	185	16 (20)	145	4 (8)	M16	18	14 (16)	94	55	168	260	17.435k	172	220
17.435-	102	80	200	18 (20)	160	8	M16	18	16	94	60	136	228	17.435k	140	188
17.435-	102	100	220	18 (22)	180	8	M16	18	16 (18)	94	70 (71)	148 (149)	240 (241)	17.435k	152 (153)	200 (201)
17.435-	102	125	250	18 (22)	210	8	M16	18	18	94	85 (88)	221 (224)	313 (316)	17.435k	265 (268)	313 (316)
17.435-	152	100	220	18 (22)	180	8	M16	18	16 (18)	142	70 (71)	197 (198)	325 (326)	17.435k	205 (206)	285 (286)
17.435-	152	125	250	18 (22)	210	8	M16	18	18	142	90 (93)	192 (195)	320 (323)	17.435k	200 (203)	280 (283)
17.435-	152	150	285	18 (24)	240	8	M20	22	18 (20)	142	105 (108)	273 (276)	401 (404)	17.435k	240 (243)	320 (323)
17.435-	152	200	340	20 (26)	295	12	M20	22	20	142	120 (124)	252 (256)	380 (384)	17.435k	260 (264)	340 (344)

Note
deviating measurements when En flanges are used

Dietzel Hydraulik GmbH
Leedenstraße 10
04626 Löbichau

Tel.: +49 (36602) 140-140

E-Mail: vertrieb@dietzel-hydraulik.de

Suction and low-pressure fittings

loose DIN flange 90°

Updated at:
24.05.2022

Connection
loose DIN flange

Standard
DIN 2673 (new: EN1092-1, Typ 04 PN16 and Typ 34 PN16)

Application
14A / 17A flexible tubes

Material
Steel

Surface protection
Zinc-electroplated

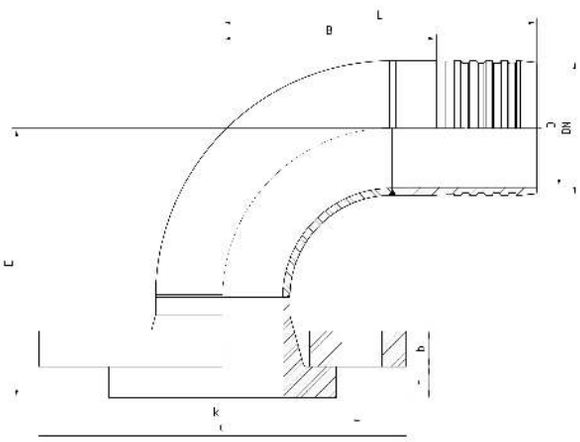

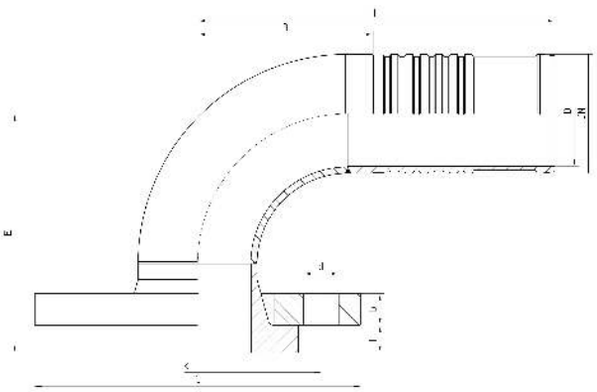

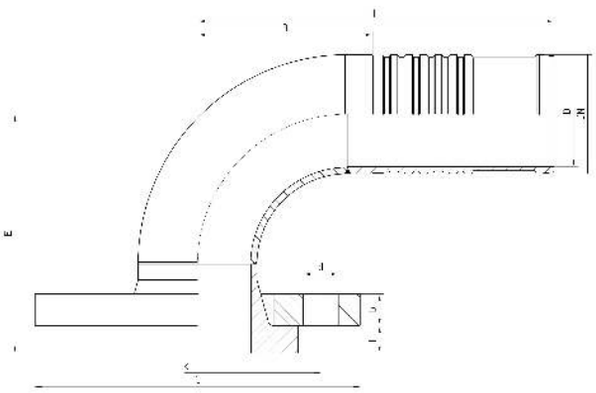

Order no.	DN in mm	DN DIN-Flange	C in mm	b in mm	k in mm	number of screws	screws T	d in mm	h in mm	D in mm	E±3 in mm	B±3 in mm	L±3 in mm	Order No.	B±3 in mm	L±3 in mm
17.439-	19	20	105	14 (16)	75	4	M12	14	12 (14)	14	70	50	130	17.439K	46	90
17.439-	19	25	115	16	85	4	M12	14	12 (14)	14	75	55	135	17.439K	51	95
17.439-	25	20	105	14 (16)	75	4	M12	14	12 (14)	19	70	50	130	17.439K	46	90
17.439-	25	25	115	16	85	4	M12	14	12 (14)	19	75	55	135	17.439K	51	95

Dietzel Hydraulik GmbH
Leedenstraße 10
04626 Löbichau

Tel.: +49 (36602) 140-140

E-Mail: vertrieb@dietzel-hydraulik.de

Order no.	DN in mm	DN DIN-Flange	C in mm	b in mm	k in mm	number of screws	screws T	d in mm	h in mm	D in mm	E±3 in mm	B±3 in mm	L±3 in mm	Order No.	B±3 in mm	L±3 in mm
17.439-	25	32	140	16 (18)	100	4	M16	18	12 (14)	19	85 (87)	65	145	17.439k	61	105
17.439-	31	20	105	14 (16)	75	4	M12	14	12 (14)	26	75	55	135	17.439k	51	95
17.439-	31	25	115	16	85	4	M12	14	12 (14)	26	75	55	135	17.439k	51	95
17.439-	31	32	140	16 (18)	100	4	M16	18	12 (14)	26	85 (87)	75	155	17.439k	61	105
17.439-	31	40	150	16 (18)	110	4	M16	18	12 (14)	26	90 (95)	70	150	17.439k	66	110
17.439-	38	20	105	(14) 16	75	4	M12	14	12 (14)	32	75	55	135	17.439k	51	95
17.439-	38	25	115	16	85	4	M12	14	12 (14)	32	75	55	135	17.439k	51	95
17.439-	38	32	140	16 (18)	100	4	M16	18	12 (14)	32	85 (87)	65	145	17.439k	61	105
17.439-	38	40	150	16 (18)	110	4	M16	18	12 (14)	32	90 (95)	70	150	17.439k	66	110
17.439-	38	50	165	16 (20)	125	4	M16	18	14 (16)	32	108	105	185	17.439k	98	142
17.439-	51	25	115	16	85	4	M12	14	12 (14)	44	85	86	178	17.439k	93	138
17.439-	51	32	140	16 (18)	100	4	M16	18	12 (14)	44	104 (106)	82	174	17.439k	93	138
17.439-	51	40	150	16 (18)	110	4	M16	18	12 (14)	44	97	75	167	17.439k	88	133
17.439-	51	50	165	16 (20)	125	4	M16	18	14 (16)	44	121	94	186	17.439k	98	143
17.439-	51	65	185	16 (20)	145	4 (8)	M16	18	14 (16)	44	139	203	295	17.439k	134	179
17.439-	60	25	115	16	85	4	M12	14	12 (14)	53	85	88	180	17.439k	95	140
17.439-	60	32	140	16 (18)	100	4	M16	18	12 (14)	53	90 (92)	93	185	17.439k	100	145
17.439-	60	40	150	16 (18)	110	4	M16	18	12 (14)	53	106 (111)	94	186	17.439k	101	146
17.439-	60	50	165	16 (20)	125	4	M16	18	14 (16)	53	118	86	178	17.439k	93	138
17.439-	60	65	185	16 (20)	145	4 (8)	M16	18	14 (16)	53	139	145	237	17.439k	132	177
17.439-	60	80	200	18 (20)	160	8	M16	18	16	53	145	125	217	17.439k	132	177
17.439-	76	32	140	16 (18)	100	4	M16	18	12 (14)	69	90 (92)	100	192	17.439k	107	152
17.439-	76	40	150	16 (18)	110	4	M16	18	12 (14)	69	106 (111)	113	205	17.439k	120	165
17.439-	76	50	165	16 (20)	125	4	M16	18	14 (16)	69	118	123	215	17.439k	125	170
17.439-	76	65	185	16 (20)	145	4 (8)	M16	18	14 (16)	69	139	123	215	17.439k	124	169
17.439-	76	80	200	18 (20)	160	8	M16	18	16	69	163	162	254	17.439k	169	214
17.439-	76	100	220	18 (22)	180	8	M16	18	16 (18)	69	182 (184)	177	269	17.439k	184	229

Dietzel Hydraulik GmbH
Leedenstraße 10
04626 Löbichau

Tel.: +49 (36602) 140-140

E-Mail: vertrieb@dietzel-hydraulik.de

Order no.	DN in mm	DN DIN-Flange	C in mm	b in mm	k in mm	number of screws	screws T	d in mm	h in mm	D in mm	E±3 in mm	B±3 in mm	L±3 in mm	Order No.	B±3 in mm	L±3 in mm
17.439-	90	40	150	16(18)	110	4	M16	18	12 (14)	82	106 (111)	121	213	17.439k	128	173
17.439-	90	50	165	16 (20)	125	4	M16	18	14 (16)	82	118	125	217	17.439k	132	177
17.439-	90	65	185	16 (20)	145	4 (8)	M16	18	14 (16)	82	139	125	217	17.439k	132	177
17.439-	90	80	200	18 (20)	160	8	M16	18	16	82	163	151	243	17.439k	158	203
17.439-	90	100	220	18 (22)	180	8	M16	18	16 (18)	82	182 (184)	170	262	17.439k	177	222
17.439-	102	50	165	16 (20)	125	4	M16	18	14 (16)	94	118	140	232	17.439k	144	192
17.439-	102	65	185	16 (20)	145	4 (8)	M16	18	14 (16)	94	139	157	249	17.439k	161	209
17.439-	102	80	200	18 (20)	160	8	M16	18	16	94	163	139	231	17.439k	143	191
17.439-	102	100	220	18 (22)	180	8	M16	18	16 (18)	94	182 (184)	160	252	17.439k	164	212
17.439-	102	125	250	18 (22)	210	8	M16	18	18	94	232 (237)	245	337	17.439k	170	218
17.439-	152	100	220	18 (22)	180	8	M16	18	16 (18)	142	204 (206)	320	448	17.439k	217	297
17.439-	152	125	250	18 (22)	210	8	M16	18	18	142	240 (245)	222	350	17.439k	230	310
17.439-	152	150	285	18 (24)	240	8	M20	22	18 (20)	142	263 (268)	242	370	17.439k	250	330
17.439-	152	200	340	20 (26)	295	12	M20	22	20	142	330 (337)	322	450	17.439k	330	410

Note
deviating measurements when En flanges are used

Dietzel Hydraulik GmbH
Leedenstraße 10
04626 Löbichau

Tel.: +49 (36602) 140-140

E-Mail: vertrieb@dietzel-hydraulik.de

Suction and low-pressure fittings

weld-on nipple straight

Updated at:
24.05.2022

Connection
Schlaunippel mit Rohr zum Anschweißen

Application
14A / 17A flexible tubes

Material
Steel

Surface protection
without

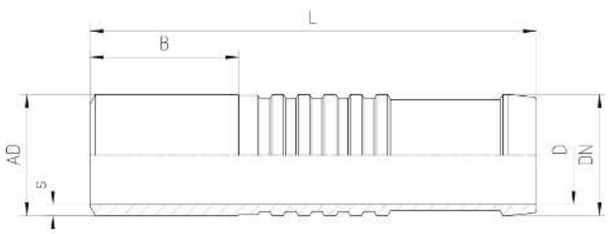

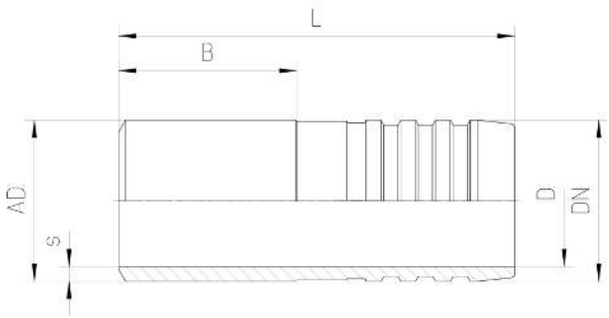

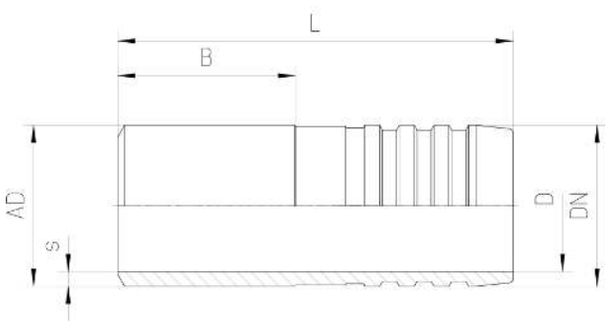

Order no.	DN in mm	Tube AD x s in mm	D in mm	B±3 in mm	L±3 in mm	Order No.	B±3 in mm	L±3 in mm
17.001-12	19	20,0x3,2	14,0	40	120	17.001K-12	36	80
17.001-16	25	26,1x3,1	19,0	40	120	17.001K-16	36	80
17.001-20	31	32,5x3,0	26,0	40	120	17.001K-20	36	80
17.001-24	38	38,8x3,0	32,0	40	120	17.001K-24	36	80
17.001-32	51	52,0x3,75	44,5	28	120	17.001K-32	45	90
17.001-36	60	60,3x3,6	53,0	28	120	17.001K-36	40	85
17.001-48	76	76,1x4,0	69,0	48	140	17.001K-48	55	100
17.001-56	90	88,9x3,6	82,0	58	150	17.001K-56	55	100
17.001-64	102	101,6x3,6	94,0	68	160	17.001K-64	72	120

Dietzel Hydraulik GmbH
Leedenstraße 10
04626 Löbichau

Tel.: +49 (36602) 140-140

E-Mail: vertrieb@dietzel-hydraulik.de

Order no.	DN in mm	Tube AD x s in mm	D in mm	B±3 in mm	L±3 in mm	Order No.	B±3 in mm	L±3 in mm
17.001-96	152	152,4x5,6	142,0	32	160	17.001K-96	40	120

Dietzel Hydraulik GmbH
Leedenstraße 10
04626 Löbichau

Tel.: +49 (36602) 140-140

E-Mail: vertrieb@dietzel-hydraulik.de

Suction and low-pressure fittings

weld-on nipple 45°

Updated at:
24.05.2022

Connection
Schlaunippel mit Rohr zum Anschweißen

Application
14A / 17A flexible tubes

Material
Steel

Surface protection
without

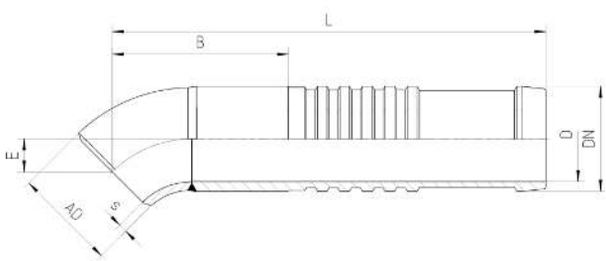

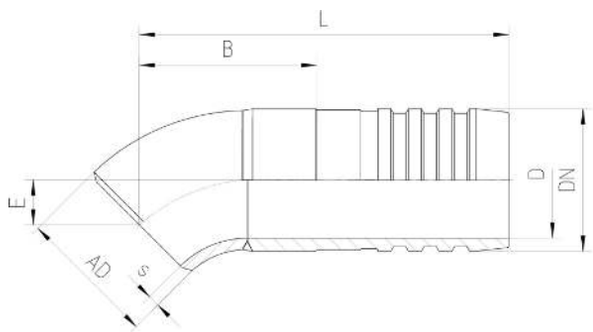

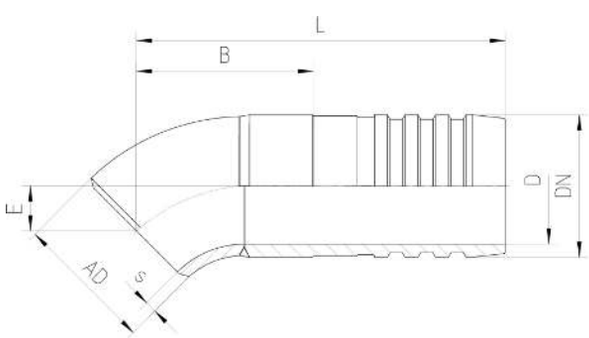

Order no.	DN in mm	Tube bend DIN2605/3S AD x s	D in mm	E±3 in mm	B±3 in mm	L±3 in mm	Order No.	B±3 in mm	L±3 in mm
17.005-12	19	21,3 x 2,0	14,0	7	26	120	17.005K-12	36	80
17.005-16	25	26,9 x 2,3	19,0	10	30	125	17.005K-16	41	85
17.005-20	31	31,8 x 2,6	26,0	14	34	135	17.005K-20	51	95
17.005-24	38	38,0 x 2,6	32,0	17	60	140	17.005K-24	56	100
17.005-32	51	51,0 x 3,2	44,5	20	78	170	17.005K-32	85	130
17.005-36	60	60,3 x 2,9	53,0	23	68	160	17.005K-36	75	120
17.005-48	76	76,1 x 2,9	69,0	29	59	190	17.005K-48	105	150
17.005-56	90	88,9 x 3,2	82,0	35	75	205	17.005K-56	120	165

Dietzel Hydraulik GmbH
Leedenstraße 10
04626 Löbichau

Tel.: +49 (36602) 140-140

E-Mail: vertrieb@dietzel-hydraulik.de

Order no.	DN in mm	Tube bend DIN2605/3S AD x s	D in mm	E±3 in mm	B±3 in mm	L±3 in mm	Order No.	B±3 in mm	L±3 in mm
17.005-64	102	101,6 x 3,6	94,0	45	75	215	17.005K-64	127	175
17.005-96	152	139,0 x4,0	131,0	62	112	290	17.005K-96	170	250

Dietzel Hydraulik GmbH
Leedenstraße 10
04626 Löbichau

Tel.: +49 (36602) 140-140

E-Mail: vertrieb@dietzel-hydraulik.de

Suction and low-pressure fittings

weld-on nipple 90°

Updated at:
24.05.2022

Connection
Schlaunippel mit Rohr zum Anschweißen

Application
14A / 17A flexible tubes

Material
Steel

Surface protection
without

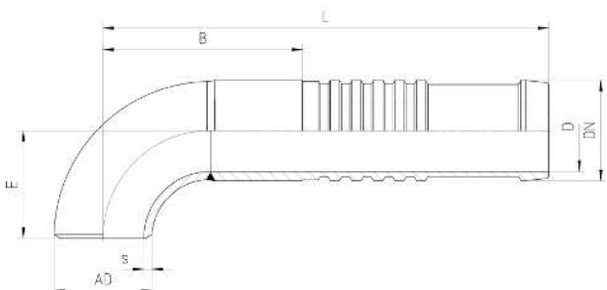

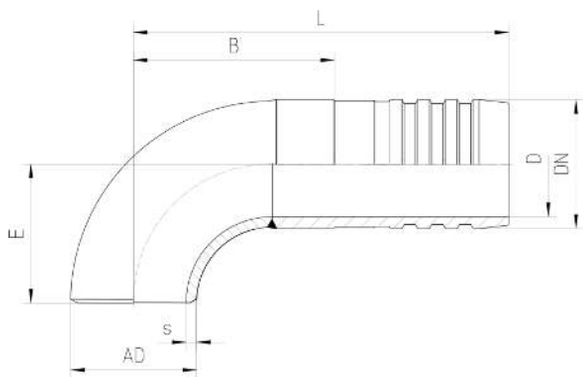

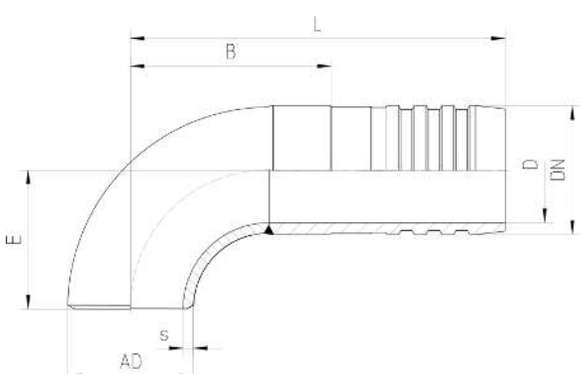

Order no.	DN in mm	Tube bend DIN2605/3S AD x s	D in mm	E±3 in mm	B±3 in mm	L±3 in mm	Order No.	B±3 in mm	L±3 in mm
17.009-12	19	21,3x2,0	14,0	26	71	125	17.009K-12	41	85
17.009-16	25	26,9x2,3	19,0	29	79	130	17.009K-16	46	90
17.009-20	31	31,8x2,6	26,0	35	90	135	17.009K-20	51	95
17.009-24	38	38,0x2,6	32,0	45	65	145	17.009K-24	61	105
17.009-32	51	51,0x3,2	44,5	64	102	194	17.009K-32	111	156
17.009-36	60	60,3x2,9	53,0	76	91	181	17.009K-36	96	141
17.009-48	76	76,1x2,9	69,0	95	125	215	17.009K-48	130	175
17.009-56	90	88,9x3,2	82,0	114	144	234	17.009K-56	149	194

Dietzel Hydraulik GmbH
Leedenstraße 10
04626 Löbichau

Tel.: +49 (36602) 140-140

E-Mail: vertrieb@dietzel-hydraulik.de

Order no.	DN in mm	Tube bend DIN2605/3S AD x s	D in mm	E±3 in mm	B±3 in mm	L±3 in mm	Order No.	B±3 in mm	L±3 in mm
17.009-64	102	101,6x3,6	94,0	133	163	253	17.009K-64	165	213
17.009-96	152	139,0x4,0	131,0	190	250	350	17.009K-96	230	310

Dietzel Hydraulik GmbH
Leedenstraße 10
04626 Löbichau

Tel.: +49 (36602) 140-140

E-Mail: vertrieb@dietzel-hydraulik.de

Suction and low-pressure fittings

Ferrules 117G

Updated at:
24.05.2022

Application
fitting type dh1000 fittings up to DN63, DH17 ab DN76 14A / 17A flexible tubes

Material
Steel

Surface protection
Zinc-electroplated

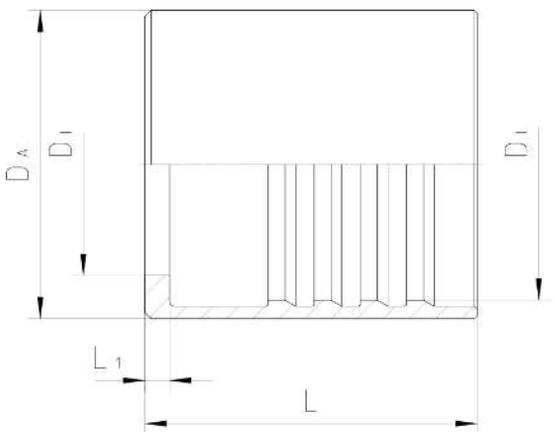

Order no.	DN in mm	DA in mm	DI in mm	DL in mm	L in mm	L1 in mm
117G-12	19	36,0	25,0	31,0	42,5	3,0
117G-16	25	42,0	30,3	37,0	46,0	3,8
117G-20	31	50,0	38,0	44,0	54,0	4,0
117G-24	38	56,5	43,9	51,0	57,0	4,1
117G-28	45	65,0	51,5	58,5	57,0	4,3
117G-32	51	70,0	59,5	65,0	74,0	4,5
117G-36	60	82,0	69,3	75,0	75,0	4,8
117G-40	63	84,0	73,0	78,0	81,0	4,8
117G-48	76	100,5	81,0	93,3	88,0	4,0
117G-56	90	114,3	93,1	107,1	96,0	4,0
117G-64	102	133,0	110,4	124,0	96,0	4,0

Dietzel Hydraulik GmbH
Leedenstraße 10
04626 Löbichau

Tel.: +49 (36602) 140-140

E-Mail: vertrieb@dietzel-hydraulik.de

Order no.	DN in mm	DA in mm	DI in mm	DL in mm	L in mm	L1 in mm
117G-80	127	158,0	134,6	150,0	99,0	5,0
117G-96	152	189,0	159,0	175,0	131,0	6,0

Dietzel Hydraulik GmbH
Leedenstraße 10
04626 Löbichau

Tel.: +49 (36602) 140-140

E-Mail: vertrieb@dietzel-hydraulik.de

Suction and low-pressure fittings

Ferrules 115

Updated at:
24.05.2022

Application
dH15 (on request) KARA/25 hose

Material
Steel

Surface protection
Zinc-electroplated

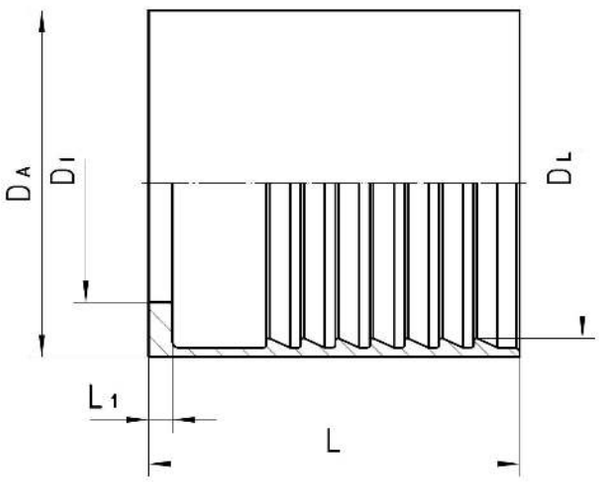

Order no.	DN in mm	DA in mm	DL in mm	DI in mm	L in mm	L1 in mm
115-20	31	55	49,1	37,8	59,0	3,8
115-24	38	67	55,5	45,5	76,7	4,2
115-32	51	80	68,2	57,8	80,2	4,4
115-40	63	98	86,0	75,0	75,0	4,5
115-48	76	108	98,0	87,0	80,0	4,5
115-64	102	143	130,0	113,0	130,0	8,6

Dietzel Hydraulik GmbH
Leedenstraße 10
04626 Löbichau

Tel.: +49 (36602) 140-140

E-Mail: vertrieb@dietzel-hydraulik.de

Suction and low-pressure fittings

Ferrules 116

Updated at:
24.05.2022

Application
dH15 (on request) TW hose

Material
Steel

Surface protection
Zinc-electroplated

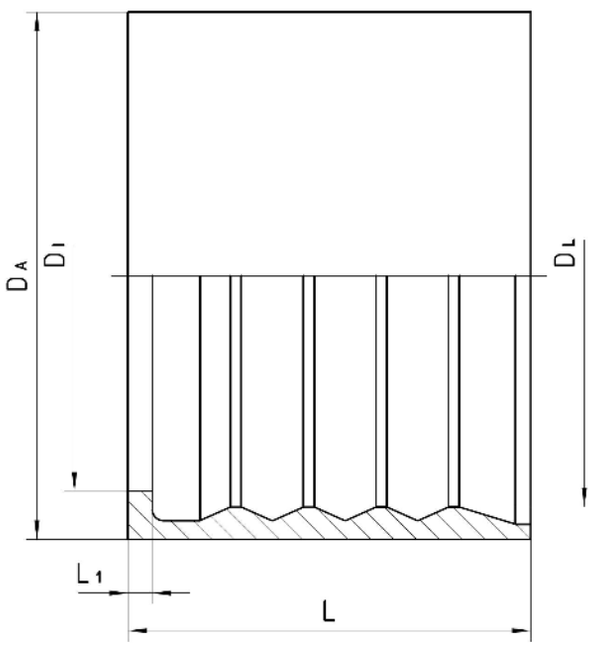

Order no.	DN in mm	DA in mm	DL in mm	DI in mm	L in mm	L1 ±0,1 in mm
116-40	63	98	86	80	75	4,5
116-48	76	108	98	91	80	4,5
116-50	80	110	100	92	100	7,8
116-64	102	136	121	112	130	8,8

Dietzel Hydraulik GmbH
Leedenstraße 10
04626 Löbichau

Tel.: +49 (36602) 140-140

E-Mail: vertrieb@dietzel-hydraulik.de

Suction and low-pressure fittings

Clamp mouting 113

Updated at:
24.05.2022

Application
fitting type dh1000 fittings up to DN31, fitting type dh13 for DN38 an bigger (on request) 14A / KARA25 hoses

Material
Aluminium / brass

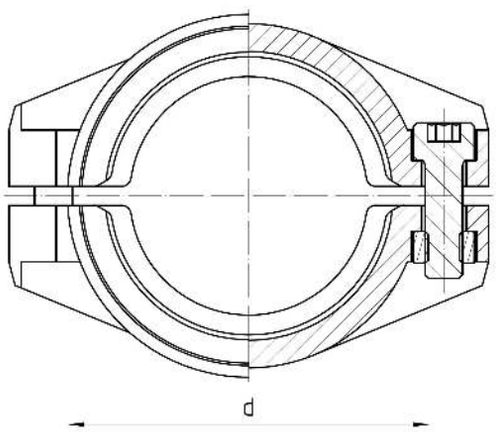

Order no.	Order no. old	DN in mm	clamp range d in mm
113-001	113-022024-Al	13	22 - 24
113-002	113-024026-MS	13	24 - 26
113-003	113-026028-MS	13	26 - 28
113-004	113-030033-Al	19	30 - 33
113-005	113-032034-MS	19	32 - 34
113-006	113-034036AL	19	34 - 36
113-007	113-036039-AL	25	36 - 39
113-008	113-037039-MS	25	37 - 39
113-009	113-039041-MS	25	39 - 41
113-010	113-040043-Al	25	40 - 43
113-011	113-041043-MS	25	41 - 43
113-012	113-043046-Al	31	43 - 46
113-013	113-047050-Al	31	47 - 50
113-014	113-050052-Al	38	50 - 52
113-016	113-053056-Al	38	53 - 56
113-017	113-057060-Al	38	57 - 60
113-018	113-058061-Al	40	58 - 61
113-019	113-064067-Al	52	64 - 67
113-020	113-067069-MS	52	67 - 69
113-021	113-069071-Al	52	69 - 71
113-022	113-073076-MS	52	73 - 76
113-023	113-078082-Al	65	78 - 82

Dietzel Hydraulik GmbH
Leedenstraße 10
04626 Löbichau

Tel.: +49 (36602) 140-140

E-Mail: vertrieb@dietzel-hydraulik.de

Order no.	Order no. old	DN in mm	clamp range d in mm
113-024	113-084087-Al	65	84 - 87
113-025	113-088091-MS	65	88 - 91
113-026	113-089093-Al	75	89 - 93
113-027	113-094097-Al	75	94 - 97
113-029	113-098101-Al	75	98 - 101
113-030	113-099102-Al	80	99 - 102
113-031	113-114119-Al	102	114 - 119
113-032	113-118122-Al	102	118 - 122
113-033	113-122126-Al	102	122 - 126
113-034	113-126130-Al	102	126 - 130
113-035	113-130134-Al	102	130 - 134
113-036	113-143148-Al	125	143 - 148
113-037	113-149154-Al	125	149 - 154
113-038	113-153158-Al	125	153 - 158
113-039	113-168174-Al	152	168 - 174
113-040	113-174180-Al	152	174 - 180
113-041	113-178184-Al	152	178 - 184
113-042	113-222229-Al	200	222 - 229
113-043	113-230239-Al	200	230 - 239

Dietzel Hydraulik GmbH
Leedenstraße 10
04626 Löbichau

Tel.: +49 (36602) 140-140

E-Mail: vertrieb@dietzel-hydraulik.de

Suction and low-pressure fittings

Hose clamp one piece 119

Updated at:
24.05.2022

Application
dH17, dH17.K 14A / 17A hoses

Material
Stainless steel braid (AISI 430)

Surface protection
Steel: Zinc-electroplated

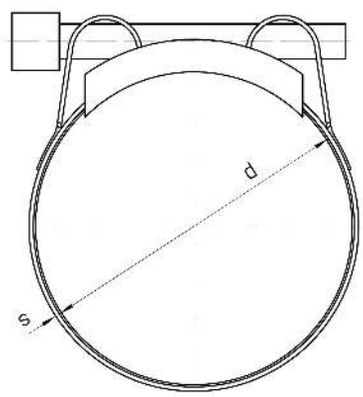

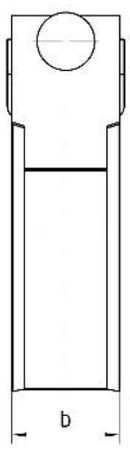

Order no.	Order no. old	* DN for Hose Typ "17A"	clamping range d in mm	Steel strip width b in mm	Steel strip thickness s in mm
119-001	119-021023		21 - 23	18	0,6
119-002	119-023025		23 - 25	18	0,6
119-003	119-025027		25 - 27	18	0,6
119-004	119-027029		27 - 29	18	0,6
119-005	119-029031	19	29 - 31	20	0,8
119-006	119-031034		31 - 34	20	0,8
119-007	119-034037	25	34 - 37	20	0,6
119-008	119-037040		37 - 40	20	0,8
119-009	119-040043		40 - 43	20	0,8
119-010	119-043047		43 - 47	20	0,9
119-011	119-047051	38	47 - 51	20	0,9

Dietzel Hydraulik GmbH
Leedenstraße 10
04626 Löbichau

Tel.: +49 (36602) 140-140

E-Mail: vertrieb@dietzel-hydraulik.de

Order no.	Order no. old	* DN for Hose Typ "17A"	clamping range d in mm	Steel strip width b in mm	Steel strip thickness s in mm
119-012	119-051055		51 - 55	20	0,9
119-013	119-055059		55 - 59	20	0,9
119-014	119-059063		59 - 63	20	0,9
119-015	119-063068		63 - 68	20	0,9
119-016	119-068073	60	68 - 73	25	1,0
119-017	119-073079	63	73 - 79	25	1,0
119-019	119-079085		79 - 85	25	1,0
119-020	119-085091	76	85 - 91	25	1,0
119-021	119-091097		91 - 97	25	1,0
119-023	119-097104	90	97 - 104	25	1,0
119-024	119-104112		104 - 112	25	1,0
119-025	119-112121	102	112 - 121	25	1,0
119-026	119-121130		121 - 130	25	1,0
119-027	119-130140		130 - 140	28	1,2
119-028	119-140150	127	140 - 150	28	1,2
119-029	119-150162		150 - 162	28	1,2
119-030	119-162174	152	162 - 174	28	1,2
119-031	119-174187		174 - 187	28	1,2
119-033	119-187200		187 - 200	28	1,2
119-034	119-200213		200 - 213	28	1,2
119-035	119-213226		213 - 226	28	1,2
119-036	119-226239		226 - 239	28	1,2
119-037	119-239252		239 - 252	28	1,2

Dietzel Hydraulik GmbH
Leedenstraße 10
04626 Löbichau

Tel.: +49 (36602) 140-140

E-Mail: vertrieb@dietzel-hydraulik.de

Suction and low-pressure fittings

Hose clamp two piece 219

Updated at:
24.05.2022

Application
dH17, dH17.K 14A / 17A hoses

Material
steel

Surface protection
Zinc-electroplated

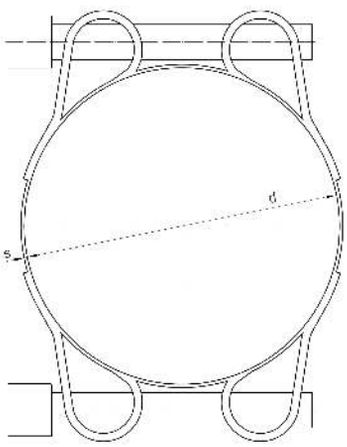

Order no.	Order no. old	* DN for Hose Typ "17A"	clamping range d in mm	Steel strip width b in mm	Steel strip thickness s in mm
219-001	219-047052		47 - 52	20	1
219-002	219-057062	51	57 - 62	20	1,0
219-004	219-067072	60	67 - 72	20	1,0
219-006	219-087092	76	87 - 92	20	1,0
219-007	219-102107		102 - 107	20	1,0
219-008	219-112117	102	112 - 117	20	1,0
219-009	219-141147	127	141 - 147	25	1,5
219-011	219-165172		165 - 172	25	1,5
219-012	219-215222	200	215 - 222	30	2,0

Dietzel Hydraulik GmbH
Leedenstraße 10
04626 Löbichau

Tel.: +49 (36602) 140-140

E-Mail: vertrieb@dietzel-hydraulik.de

Suction and low-pressure fittings

Ball valves with flange connection acc. to DIN 2673

Updated at:
24.05.2022

Order no.	DN in mm	DN DIN-Flange	Ball valve	D in mm	b in mm	k in mm	d2 in mm	h in mm	screws number	screws thread	d1 (inside diameter Ball valve)	L ±3 in mm
33.3/4-434-1	25	20	3/4	105	14	75	14	12	4	M12	19	183
33.1-434-16-	31	25	1	115	16	85	14	12	4	M12	24	202
33.1 1/4-434-20-	38	32	1 1/4	140	16	100	18	12	4	M16	30	208
33.1 1/2-434-24-	51	40	1 1/2	150	16	110	18	12	4	M16	38	230
33.2-434-32-	60	50	2	165	16	125	18	14	4	M16	48	245
33.2 1/2-434-40-	76	65	2 1/2	185	16	145	18	14	4	M16	64	260
33.3-434-48-	90	80	3	200	18	160	18	16	8	M16	74	290
33.4-434-64-	102	100	4	220	18	180	18	16	8	M16	98	340

Dietzel Hydraulik GmbH
Leedenstraße 10
04626 Löbichau

Tel.: +49 (36602) 140-140

E-Mail: vertrieb@dietzel-hydraulik.de

Suction and low-pressure fittings

Ball valves with SAE flange connection

Updated at:
24.05.2022

Material
Ball valve: casing: nickelized brass; fittings:steel Ball: hard chromium plated brass sealing: teflon

Surface protection
DIN 50979 Fe//Zn8//Cn//T2

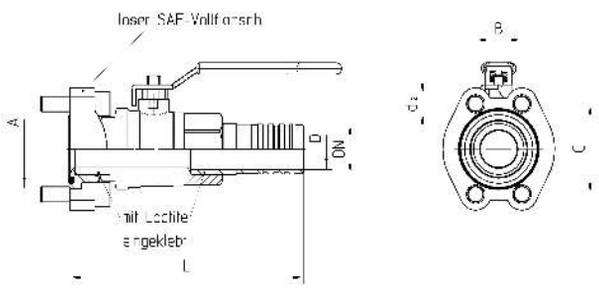

Order no.	DN in mm	Ball valve in inch	flange in inch	d1 (inside diameter Ball valve)	L±5 in mm	A in mm	B in mm	C in mm	d2 in mm
33.3/4-16-16	25	3/4	1	20	140	44,45	26,2	52,4	10,5
33.1-20-20	31	1	1 1/4	25	155	50,8	30,2	58,7	12,0
33.1 1/4-24-24	38	1 1/4	1 1/2	32	165	60,33	35,7	69,9	13,5
33.1 1/2-40-32	51	1 1/2	2 1/2	38	187	84,12	50,8	88,9	13,5
33.2-48-36	60	2	3	48	200	101,6	61,9	106,4	16,8
33.2 1/2-64-48	76	2 1/2	4	64	220	127,0	77,8	130,2	17,0
33.3-80-56	90	3	5	74	245	152,4	92,1	152,4	17,0
33.4-80-64	102	4	5	98	346	152,4	92,1	152,4	17,0

Note
Extent of supply: incl. full flange, O-ring, screws

Dietzel Hydraulik GmbH
Leedenstraße 10
04626 Löbichau

Tel.: +49 (36602) 140-140

E-Mail: vertrieb@dietzel-hydraulik.de

Suction and low-pressure fittings

Ball valves SAE flange connection 90° 1st variant

Updated at:
24.05.2022

Material
Ball valve: casing: nickelized brass; fittings:steel Ball: hard chromium plated brass sealing: teflon

Surface protection
DIN 50979 Fe//Zn8//Cn//T2

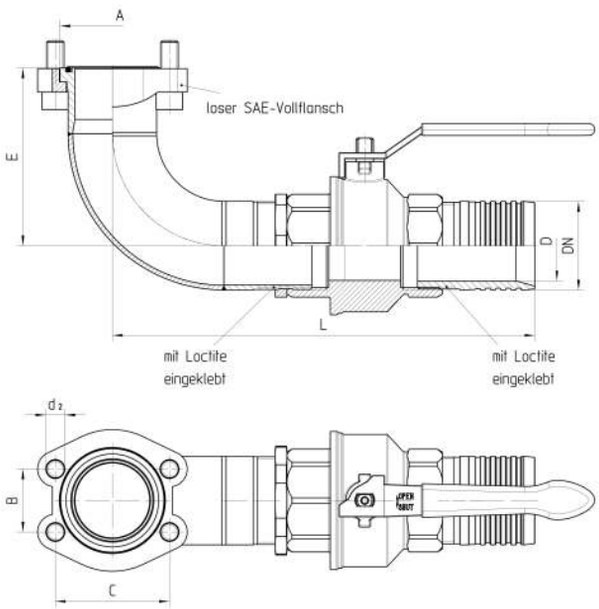

Order no.	DN in mm	Ball valve in inch	flange in inch	d1 (inside diameter Ball valve)	E±3 in mm	L±5 in mm	A in mm	B in mm	C in mm	d2 in mm
33.3/4-12/90-16	25	3/4	3/4	20	59,0	206	38,10	22,2	47,6	10,5
33.1-16/90-20	31	1	1	25	70,0	233	44,45	26,2	52,4	10,5
33.1 1/4-20/90-24	38	1 1/4	1 1/4	32	85,0	255	50,80	30,2	58,7	12,0
33.1 1/2-24/90-32	51	1 1/2	1 1/2	38	102,0	287	60,33	35,7	69,9	13,5
33.2-32/90-36	60	2	2	48	121,0	326	71,42	42,9	77,8	13,5

Dietzel Hydraulik GmbH
Leedenstraße 10
04626 Löbichau

Tel.: +49 (36602) 140-140

E-Mail: vertrieb@dietzel-hydraulik.de

Order no.	DN in mm	Ball valve in inch	flange in inch	d1 (inside diameter Ball valve)	E±3 in mm	L±5 in mm	A in mm	B in mm	C in mm	d2 in mm
33.2 1/2-40/90-48	76	2 1/2	2 1/2	64	145,0	378	84,12	50,8	88,9	13,5
33.3-48/90-56	90	3	3	74	166,0	424	101,60	61,90	106,4	16,8
33.4-64/90-64	102	4	4	98	201,0	530	127,0	77,80	130,2	17,0

Note
Extent of supply: incl. full flange, O-ring, screws

Dietzel Hydraulik GmbH
Leedenstraße 10
04626 Löbichau

Tel.: +49 (36602) 140-140

E-Mail: vertrieb@dietzel-hydraulik.de

Suction and low-pressure fittings

Ball valves with SAE flange connection 90° 2nd variant

Updated at:
24.05.2022

Order no.	DN in mm	Ball valve	flange in inch	d1 (inside diameter Ball valve)	L±5 in mm	E±3 in mm	A in mm	B in mm	C in mm	d2 in mm
33.3/4-16-16/90	25	3/4	1	20	132	89	44,45	26,2	52,4	10,5
33.1-20-20/90	31	1	1 1/4	25	154	98	50,80	30,2	58,7	12,0
33.1 1/4-24-24/90	38	1 1/4	1 1/2	32	177	108	60,33	35,7	69,9	13,5
33.1 1/2-40-32/90	51	1 1/2	2 1/2	38	205	122	84,12	50,8	88,9	13,5
33.2-48-36/90	60	2	3	48	236	141	101,60	61,9	106,4	16,8
33.2 1/2-64-48/90	76	2 1/2	4	64	277	175	127,00	77,8	130,2	17,0
33.3-80-56/90	90	3	5	74	320	205	152,40	92,1	152,4	17,0
33.4-80-64/90	102	4	5	98	409	248	152,00	92,1	152,4	17,0

Dietzel Hydraulik GmbH
Leedenstraße 10
04626 Löbichau

Tel.: +49 (36602) 140-140

E-Mail: vertrieb@dietzel-hydraulik.de

Suction and low-pressure fittings

Tank connector with SAE flange

Updated at:
24.05.2022

Order no.	SAE-Flange	Tube dimension (dxs)	L Tube	Cylinder screws DIN EN ISO 4762 -8.8 4x	O - Ring
18.420-08-0450	1/2	18,0 x 1,5	450	M 8x25	18,66x3,53
18.420-12-0500	3/4	28,0 x 3,0	500	M 10x30	25,00x3,53
18.420-16-0550	1	35,0 x 3,0	550	M 10x30	32,92x3,53
18.420-20-0600	1 1/4	42,0 x 3,0	600	M 10x30	37,70x3,53
18.420-24-0650	1 1/2	48,3 x 3,2	650	M 12x35	47,22x3,53
18.420-32-0700	2	60,3 x 3,6	700	M 12x35	56,75x3,53
18.420-40-0750	2 1/2	76,1 x 3,6	750	M 12x35	69,45x3,53
18.420-48-1250	3	88,9 x 3,6	1250	M 16x45	85,32x3,53
18.420-56-1500	3 1/2	101,6 x 3,6	1500	M 16x45	98,02x3,53
18.420-64-1500	4	114,3 x 3,6	1500	M 16x45	110,72x3,53
18.420-80-1500	5	139,7 x 4,0	1500	M 16x50	136,12x3,53

Dietzel Hydraulik GmbH
Leedenstraße 10
04626 Löbichau

Tel.: +49 (36602) 140-140

E-Mail: vertrieb@dietzel-hydraulik.de

Suction and low-pressure fittings

Tank connector with SAE flange 90° elbow

Updated at:
24.05.2022

Order no.	SAE-Flange	Tube dimension (dxs)	E±3 in mm	L Tube	Cylinder screws DIN EN ISO 4762 -8.8 4x	O - Ring
18.470-08-0600	1/2	18,0 x 1,5	50,0	600	M 8x25	18,66x3,53
18.470-12-0650	3/4	28,0 x 3,0	65,0	650	M 10x30	25,00x3,53
18.470-16-0700	1	35,0 x 3,0	80,0	700	M 10x30	32,92x3,53
18.470-20-0750	1 1/4	42,0 x 3,0	100,0	750	M 10x30	37,70x3,53
18.470-24-0800	1 1/2	48,3 x 3,2	103,5	800	M 12x35	47,22x3,53
18.470-32-0850	2	60,3 x 3,6	123,0	850	M 12x35	56,75x3,53
18.470-40-0900	2 1/2	76,1 x 3,6	147,0	900	M 12x35	69,45x3,53
18.470-48-1500	3	88,9 x 3,6	167,0	1500	M 16x45	85,32x3,53
18.470-56-1750	3 1/2	101,6 x 3,6	164,0	1750	M 16x45	98,02x3,53
18.470-64-1750	4	114,3 x 3,6	202,0	1750	M 16x45	110,72x3,53
18.470-80-1750	5	139,7 x 4,0	242,0	1750	M 16x50	136,12x3,53

Dietzel Hydraulik GmbH
Leedenstraße 10
04626 Löbichau

Tel.: +49 (36602) 140-140

E-Mail: vertrieb@dietzel-hydraulik.de

Suction and low-pressure fittings

Tank connector for gear pumps with square flange straight

Updated at:
24.05.2022

Order no.	LK	Tube dimension (dxs)	L Tube	Cylinder screws DIN EN ISO 4762 -8.8 4x	O - Ring
18.GF35LK-15.0-500	35	15.0 x 1.5	500	M 6x22	20x2.5
18.GF35LK-18.0-500	35	18.0 x 1.5	500	M 6x22	20x2.5
18.GF35LK-22.0-500	35	22.0 x 2.0	500	M 6x22	20x2.5
18.GF35LK-28.0-500	35	28.0 x 2.0	500	M 6x22	20x2.5
18.GF40LK-18.0-500	40	18.0 x 1.5	500	M 6x22	26x2.5
18.GF40LK-22.0-500	40	22.0 x 2.0	500	M 6x22	26x2.5
18.GF40LK-28.0-500	40	28.0 x 2.0	500	M 6x22	26x2.5
18.GF55LK-35.0-600	55	35.0 x 2.0	600	M 8x25	32.92x3.53
18.GF55LK-42.0-600	55	42.0 x 2.0	600	M 8x25	32.92x3.53

Dietzel Hydraulik GmbH
Leedenstraße 10
04626 Löbichau

Tel.: +49 (36602) 140-140

E-Mail: vertrieb@dietzel-hydraulik.de

Suction and low-pressure fittings

Tank connector for gear pumps with square flange 90° elbow

Updated at:
24.05.2022

Order no.	LK	Tube dimension (dxs)	L Tube	E±3 in mm	Cylinder screws DIN EN ISO 4762 -8.8 4x	O - Ring
18.WF35LK-15.0-500	35	15.0 x 1.5	500	50	M 6x22	20x2.5
18.WF35LK-18.0-500	35	18.0 x 1.5	500	50	M 6x22	20x2.5
18.WF35LK-22.0-500	35	22.0 x 2.0	500	65	M 6x22	20x2.5
18.WF35LK-28.0-500	35	28.0 x 2.0	500	65	M 6x22	20x2.5
18.WF40LK-18.0-500	40	18.0 x 1.5	500	50	M 6x22	26x2.5
18.WF40LK-22.0-500	40	22.0 x 2.0	500	65	M 6x22	26x2.5
18.WF40LK-28.0-500	40	28.0 x 2.0	500	65	M 6x22	26x2.5
18.WF55LK-35.0-600	55	35.0 x 2.0	600	80	M 8x25	32.92x3.53
18.WF55LK-42.0-600	55	42.0 x 2.0	600	100	M 8x25	32.92x3.53

Dietzel Hydraulik GmbH
Leedenstraße 10
04626 Löbichau

Tel.: +49 (36602) 140-140

E-Mail: vertrieb@dietzel-hydraulik.de

Suction and low-pressure fittings

Tank connector for return pipes for return pipe

Updated at:
24.05.2022

Order no.	Connector d (light duty)	Thread Inch	d in mm	s in mm	DKAZ
18.GE-12LR L325	12L	G 3/8	12	1,5	
18.GE-15LR L325	15L	G 1/2	16	1,5	
18.GE-18LR L325	18L	G 1/2	16	1,5	
18.GE-22LR L325	22L	G 3/4	20	1,5	*)
18.GE-28LR L325	28L	G 1	25	1,5	*)
18.GE-35LR L325	35L	G 1 1/4	35	3,0	*)
18.GE-42LR L325	42L	G 1 1/2	38	1,5	*)

Order no.	Connector d (light duty)	Thread Inch	d in mm	s in mm	DKAZ
18.GE-10SR L325	10S	G 3/8	12	1,5	
18.GE-12SR L325	12S	G 3/8	12	1,5	
18.GE-16SR L325	16S	G 1/2	16	1,5	
18.GE-20SR L325	20S	G 3/4	20	1,5	*)
18.GE-25SR L325	25S	G 1	25	1,5	*)
18.GE-30SR L325	30S	G 1 1/4	35	1,5	*)
18.GE-38SR L325	38S	G 1 1/2	38	1,5	*)

Order no.	Connector d (light duty)	Thread Inch	d in mm	s in mm	DKAZ
18.GE-12LR L180	12L	G 3/8	12	1,5	
18.GE-15LR L180	15L	G 1/2	16	1,5	
18.GE-18LR L180	18L	G 1/2	16	1,5	
18.GE-22LR L180	22L	G 3/4	20	1,5	*)
18.GE-28LR L180	28L	G 1	25	1,5	*)

Order no.	Connector d (light duty)	Thread Inch	d in mm	s in mm	DKAZ
18.GE-18LR L1000	18L	G 1/2	16	1,5	
18.GE-22LR L1000	22L	G 3/4	20	1,5	*)
18.GE-28LR L1000	28L	G 1	25	1,5	*)
18.GE-35LR L1000	35L	G 1 1/4	35	3,0	*)
18.GE-42LR L1000	42L	G 1 1/2	38	1,5	*)

Order no.	Connector d (light duty)	Thread Inch	d in mm	s in mm	DKAZ
18.GE-16SR L1000	16S	G 1/2	16	1,5	
18.GE-20SR L1000	20S	G 3/4	20	1,5	*)
18.GE-25SR L1000	25S	G 1	25	1,5	*)
18.GE-30SR L1000	30S	G 1 1/4	35	1,5	*)

Dietzel Hydraulik GmbH
Leedenstraße 10
04626 Löbichau

Tel.: +49 (36602) 140-140

E-Mail: vertrieb@dietzel-hydraulik.de

Order no.	Connector d (light duty)	Thread Inch	d in mm	s in mm	DKAZ
18.GE-38SR L1000	38S	G 1 1/2	38	1,5	*)

Dietzel Hydraulik GmbH
Leedenstraße 10
04626 Löbichau

Tel.: +49 (36602) 140-140

E-Mail: vertrieb@dietzel-hydraulik.de

Suction and low-pressure fittings

RODI

Updated at:
24.05.2022

Order no.	Bestell Nr. komplett	Bestell Nr. D1-D2	Bestell Nr. UC	Verwendbar für Anschluß
			RODI-UC-15.0-28.5	18.GF35LK-15.0-500
				18.WF35LK-15.0-500
RODI-18.0-35.0KPL	RODI-18.0-35.0KPL	RODI-18.0-35.0	RODI-UC-18.0-28.5	18.420-08-0450
				18.470-08-0600
				18.GF35LK-18.0-500
				18.GF40LK-18.0-500
				18.WF35LK-18.0-500
				18.WF40LK-18.0-500
RODI-22.0-42.0KPL	RODI-22.0-42.0KPL	RODI-22.0-42.0	RODI-UC-22.0-28.5	18.GF35LK-22.0-500
				18.GF40LK-22.0-500
				18.WF35LK-22.0-500
				18.WF40LK-22.0-500
RODI-28.0-48.3KPL	RODI-28.0-48.3KPL	RODI-28.0-48.3	RODI-UC-28.0-42.5	18.420-12-0500
				18.470-12-0650
				18.GF35LK-28.0-500
				18.GF40LK-28.0-500
				18.WF35LK-28.0-500

Dietzel Hydraulik GmbH
Leedenstraße 10
04626 Löbichau

Tel.: +49 (36602) 140-140

E-Mail: vertrieb@dietzel-hydraulik.de

Order no.	Bestell Nr. komplett	Bestell Nr. D1-D2	Bestell Nr. UC	Verwendbar für Anschluß
				18.WF40LK-28.0-500
RODI-35.0-60.3KPL	RODI-35.0-60.3KPL	RODI-35.0-60.3	RODI-UC-35.0-42.5	18.420-16-0550
				18.470-16-0700
				18.GF55LK-35.0-600
				18.WF55LK-35.0-600
RODI-42.4-60.3KPL	RODI-42.4-60.3KPL	RODI-42.4-60.3	RODI-UC-42.0-58.5	18.420-20-0600
				18.470-20-0750
				18.GF55LK-42.0-600
				18.WF55LK-42.0-600
RODI-48.3-76.1KPL	RODI-48.3-76.1KPL	RODI-48.3-76.1	RODI-UC-48.5-58.5	18.420-24-0650
				18.470-24-0800
RODI-60.3-88.9KPL	RODI-60.3-88.9KPL	RODI-60.3-88.9	RODI-UC-60.5-68.5	18.420-32-0700
				18.470-32-0850
RODI-76.1-101.6KPL	RODI-76.1-101.6KPL	RODI-76.1-101.6		18.420-40-0750
				18.470-40-0900
RODI-88.9-114.3KPL	RODI-88.9-114.3KPL	RODI-88.9-114.3		18.420-48-1250
				18.470-48-1500
RODI-114.3-139.7KPL	RODI-114.3-139.7KPL	RODI-114.3-139.7		18.420-64-1500
				18.470-64-1750
RODI-139.7-168.3KPL	RODI-139.7-168.3KPL	RODI-139.7-168.3		18.420-80-1500
				18.470-80-1750

Dietzel Hydraulik GmbH
Leedenstraße 10
04626 Löbichau

Tel.: +49 (36602) 140-140

E-Mail: vertrieb@dietzel-hydraulik.de

Table of Contents

GVO straight 335
45 VO 339
90 VO 341
KOVO straight 343
KOVO 45° 347
KOVO 90° 349
Weld-on branch 351
Threaded branch 352
Straight connector 353

Updated at: 13.11.2024

Dietzel Hydraulik GmbH
Leedenstraße 10
04626 Löbichau

Tel.: +49 (36602) 140-140

E-Mail: vertrieb@dietzel-hydraulik.de

Adapters

GVO straight

Updated at:
24.05.2022

connection
both sides: 24° external cone O-ring sealing with metric nut L/S series

Material
Steel

Surface protection
Zinc-electroplated

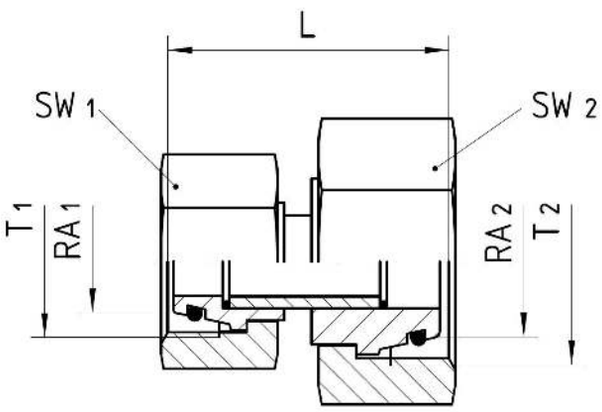

Order no.	RA1	RA2	T1	T2	SW1 in mm	SW2 in mm	L±2 in mm
GVO 6-L/ 6-L	6-L	6-L	M 12x1.5	M 12x1.5	14	14	28
GVO 6-L/ 8-L	6-L	8-L	M 12x1.5	M 14x1.5	14	17	31
GVO 6-L/10-L	6-L	10-L	M 12x1.5	M 16x1.5	14	19	32
GVO 6-L/ 6-S	6-L	6-S	M 12x1.5	M 14x1.5	14	17	28
GVO 6-L/ 8-S	6-L	8-S	M 12x1.5	M 16x1.5	14	19	31
GVO 6-L/10-S	6-L	10-S	M 12x1.5	M 18x1.5	14	22	32
GVO 6-S/ 6-S	6-S	6-S	M 14x1.5	M 14x1.5	17	17	28
GVO 6-S/ 8-S	6-S	8-S	M 14x1.5	M 16x1.5	17	19	31
GVO 6-S/10-S	6-S	10-S	M 14x1.5	M 18x1.5	17	22	32
GVO 8-L/ 8-L	8-L	8-L	M 14x1.5	M 14x1.5	17	17	32

Dietzel Hydraulik GmbH
Leedenstraße 10
04626 Löbichau

Tel.: +49 (36602) 140-140

E-Mail: vertrieb@dietzel-hydraulik.de

Order no.	RA1	RA2	T1	T2	SW1 in mm	SW2 in mm	L±2 in mm
GVO 8-L/10-L	8-L	10-L	M 14x1.5	M 16x1.5	17	19	34
GVO 8-L/12-L	8-L	12-L	M 14x1.5	M 18x1.5	17	22	34
GVO 8-L/ 8-S	8-L	8-S	M 14x1.5	M 16x1.5	17	19	33
GVO 8-L/10-S	8-L	10-S	M 14x1.5	M 18x1.5	17	22	34
GVO 8-L/12-S	8-L	12-S	M 14x1.5	M 20x1.5	17	24	33
GVO 8-S/ 8-S	8-S	8-S	M 16x1.5	M 16x1.5	19	19	33
GVO 8-S/10-S	8-S	10-S	M 16x1.5	M 18x1.5	19	22	35
GVO 8-S/12-S	8-S	12-S	M 16x1.5	M 20x1.5	19	24	33
GVO 10-L/10-L	10-L	10-L	M 16x1.5	M 16x1.5	19	19	39
GVO 10-L/12-L	10-L	12-L	M 16x1.5	M 18x1.5	19	22	38
GVO 10-L/15-L	10-L	15-L	M 16x1.5	M 22x1.5	19	27	37
GVO 10-L/10-S	10-L	10-S	M 16x1.5	M 18x1.5	19	22	39
GVO 10-L/12-S	10-L	12-S	M 16x1.5	M 20x1.5	19	24	37
GVO 10-L/14-S	10-L	14-S	M 16x1.5	M 22x1.5	19	27	39
GVO 10-L/16-S	10-L	16-S	M 16x1.5	M 24x1.5	19	30	39
GVO 10-S/10-S	10-S	10-S	M 18x1.5	M 18x1.5	22	22	39
GVO 10-S/12-S	10-S	12-S	M 18x1.5	M 20x1.5	22	24	37
GVO 10-S/14-S	10-S	14-S	M 18x1.5	M 22x1.5	22	27	39
GVO 12-L/12-L	12-L	12-L	M 18x1.5	M 18x1.5	22	22	37
GVO 12-L/15-L	12-L	15-L	M 18x1.5	M 22x1.5	22	27	36
GVO 12-L/18-L	12-L	18-L	M 18x1.5	M 26x1.5	22	32	36
GVO 12-L/12-S	12-L	12-S	M 18x1.5	M 20x1.5	22	24	37
GVO 12-L/14-S	12-L	14-S	M 18x1.5	M 22x1.5	22	27	38
GVO 12-L/16-S	12-L	16-S	M 18x1.5	M 24x1.5	22	30	38
GVO 12-L/20-S	12-L	20-S	M 18x1.5	M 30x2,0	22	36	41
GVO 12-S/12-S	12-S	12-S	M 20x1.5	M 20x1.5	24	24	36
GVO 12-S/14-S	12-S	14-S	M 20x1.5	M 22x1.5	24	27	38
GVO 12-S/16-S	12-S	16-S	M 20x1.5	M 24x1.5	24	30	38
GVO 14-S/15-L	14-S	15-L	M 22x1.5	M 22x1.5	27	27	37
GVO 14-S/18-L	14-S	18-L	M 22x1.5	M 26x1.5	27	32	37
GVO 14-S/14-S	14-S	14-S	M 22x1.5	M 22x1.5	27	27	39
GVO 14-S/16-S	14-S	16-S	M 22x1.5	M 24x1.5	27	30	39
GVO 14-S/20-S	14-S	20-S	M 22x1.5	M 30x2,0	27	36	42
GVO 15-L/15-L	15-L	15-L	M 22x1.5	M 22x1.5	27	27	39
GVO 15-L/18-L	15-L	18-L	M 22x1.5	M 26x1.5	27	32	39
GVO 15-L/22-L	15-L	22-L	M 22x1.5	M 30x2,0	27	36	39
GVO 15-L/16-S	15-L	16-S	M 22x1.5	M 24x1.5	27	30	41
GVO 15-L/20-S	15-L	20-S	M 22x1.5	M 30x2,0	27	36	44
GVO 15-L/25-S	15-L	25-S	M 22x1.5	M 36x2,0	27	46	44
GVO 16-S/18-L	16-S	18-L	M 24x1.5	M 26x1.5	30	36	41

Dietzel Hydraulik GmbH
Leedenstraße 10
04626 Löbichau

Tel.: +49 (36602) 140-140

E-Mail: vertrieb@dietzel-hydraulik.de

Order no.	RA1	RA2	T1	T2	SW1 in mm	SW2 in mm	L±2 in mm
GVO 16-S/22-L	16-S	22-L	M 24x1.5	M 30x2,0	30	30	40
GVO 16-S/16-S	16-S	16-S	M 24x1.5	M 24x1.5	30	36	42
GVO 16-S/20-S	16-S	20-S	M 24x1.5	M 30x2,0	30	46	45
GVO 16-S/25-S	16-S	25-S	M 24x1.5	M 36x2,0	30	32	46
GVO 18-L/18-L	18-L	18-L	M 26x1.5	M 26x1.5	32	36	40
GVO 18-L/22-L	18-L	22-L	M 26x1.5	M 30x2,0	32	41	41
GVO 18-L/28-L	18-L	28-L	M 26x1.5	M 36x2,0	32	36	42
GVO 18-L/20-S	18-L	20-S	M 26x1.5	M 30x2,0	32	46	45
GVO 18-L/25-S	18-L	25-S	M 26x1.5	M 36x2,0	32	50	47
GVO 18-L/30-S	18-L	30-S	M 26x1.5	M 42x2,0	32	50	45
GVO 20-S/22-L	20-S	22-L	M 30x2,0	M 30x2,0	36	36	46
GVO 20-S/28-L	20-S	28-L	M 30x2,0	M 36x2,0	36	41	46
GVO 20-S/20-S	20-S	20-S	M 30x2,0	M 30x2,0	36	36	52
GVO 20-S/25-S	20-S	25-S	M 30x2,0	M 36x2,0	36	46	51
GVO 20-S/30-S	20-S	30-S	M 30x2,0	M 42x2,0	36	50	52
GVO 22-L/22-L	22-L	22-L	M 30x2,0	M 30x2,0	36	36	43
GVO 22-L/28-L	22-L	28-l	M 30x2,0	M 36x2,0	36	41	44
GVO 22-L/35-L	22-L	35-L	M 30x2,0	M 45x2,0	36	50	51
GVO 22-L/25-S	22-L	25-S	M 30x2,0	M 36x2,0	36	46	48
GVO 22-L/30-S	22-L	30-S	M 30x2,0	M 42x2,0	36	50	48
GVO 22-L/38-S	22-L	38-S	M 30x2,0	M 52x2,0	36	60	55
GVO 25-S/28-L	25-S	28-L	M 36x2,0	M 36x2,0	46	41	49
GVO 25-S/35-L	25-S	35-L	M 36x2,0	M 45x2,0	46	50	64
GVO 25-S/25-S	25-S	25-S	M 36x2,0	M 36x2,0	46	46	52
GVO 25-S/30-S	25-S	30-S	M 36x2,0	M 42x2,0	46	50	52
GVO 25-S/38-S	25-S	38-S	M 36x2,0	M 52x2,0	46	60	59
GVO 28-L/28-L	28-L	28-L	M 36x2,0	M 36x2,0	41	41	44
GVO 28-L/35-L	28-L	35-L	M 36x2,0	M 45x2,0	41	50	46
GVO 28-L/42-L	28-L	42-L	M 36x2,0	M 52x2,0	41	60	51
GVO 28-L/30-S	28-L	30-S	M 36x2,0	M 42x2,0	41	50	46
GVO 28-L/38-S	28-L	38-S	M 36x2,0	M 52x2,0	41	60	54
GVO 30-S/35-L	30-S	35-L	M 42x2,0	M 45x2,0	50	50	53
GVO 30-S/42-L	30-S	42-L	M 42x2,0	M 52x2,0	50	60	53
GVO 30-S/30-S	30-S	30-S	M 42x2,0	M 42x2,0	50	50	54
GVO 30-S/38-S	30-S	38-S	M 42x2,0	M 52x2,0	50	60	57
GVO 35-L/35-L	35-L	35-L	M 45x2,0	M 45x2,0	50	50	53
GVO 35-L/42-L	35-L	42-L	M 45x2,0	M 52x2,0	50	60	54
GVO 35-L/38-S	35-L	38-S	M 45x2,0	M 52x2,0	50	60	58
GVO 38-S/42-L	38-S	42-L	M 52x2,0	M 52x2,0	60	60	54
GVO 38-S/38-S	38-S	38-S	M 52x2,0	M 52x2,0	60	60	57

Dietzel Hydraulik GmbH
Leedenstraße 10
04626 Löbichau

Tel.: +49 (36602) 140-140

E-Mail: vertrieb@dietzel-hydraulik.de

Order no.	RA1	RA2	T1	T2	SW1 in mm	SW2 in mm	L±2 in mm
GVO 42-L/42-L	42-L	42-L	M 52x2,0	M 52x2,0	60	60	51
GVO 50-S/50-S	50-S	50-S	M 68x2,0	M 68x2,0	80	80	73

Accessories
O-ring DKOL/DKOS

Optionen
deviating angle and dimensions on request

Dietzel Hydraulik GmbH
Leedenstraße 10
04626 Löbichau

Tel.: +49 (36602) 140-140

E-Mail: vertrieb@dietzel-hydraulik.de

Adapters
45 VO

Updated at:
24.05.2022

connection
both sides: 24° external cone O-ring sealing with metric nut L/S series

Material
Steel

Surface protection
Zinc-electroplated

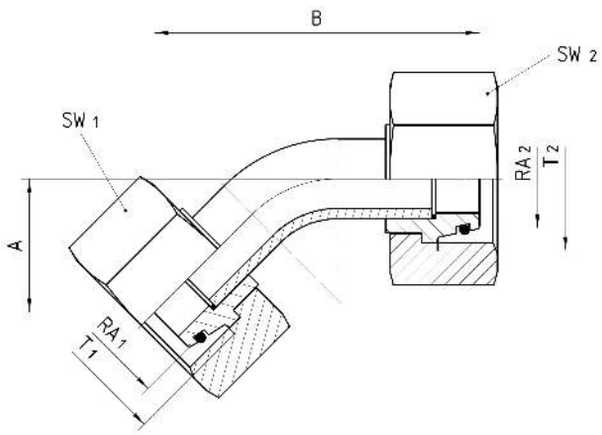

Order no.	RA1	RA2	T1	T2	SW1 in mm	SW2 in mm	A±3 in mm	B±3 in mm
45VO 6-L/ 6-L	6-L	6-L	M 12x1.5	M 12x1.5	14	14	17	48
45VO 6-S/ 6-S	6-S	6-S	M 14x1.5	M 14x1.5	17	17	16	47
45VO 8-L/ 8-L	8-L	8-L	M 14x1.5	M 14x1.5	17	17	19	52
45VO 8-S/ 8-S	8-S	8-S	M 16x1.5	M 16x1.5	19	19	18	51
45VO 10-L/10-L	10-L	10-L	M 16x1.5	M 16x1.5	19	19	23	58
45VO 10-S/10-S	10-S	10-S	M 18x1.5	M 18x1.5	22	22	22	53
45VO 12-L/12-L	12-L	12-L	M 18x1.5	M 18x1.5	22	22	23	55
45VO 12-S/12-S	12-S	12-S	M 20x1.5	M 20x1.5	24	24	20	52
45VO 14-S/14-S	14-S	14-S	M 22x1.5	M 22x1.5	27	27	22	58
45VO 15-L/15-L	15-L	15-L	M 22x1.5	M 22x1.5	27	27	23	64

Dietzel Hydraulik GmbH
Leedenstraße 10
04626 Löbichau

Tel.: +49 (36602) 140-140

E-Mail: vertrieb@dietzel-hydraulik.de

Order no.	RA1	RA2	T1	T2	SW1 in mm	SW2 in mm	A±3 in mm	B±3 in mm
45VO 16-S/16-S	16-S	16-S	M 24x1.5	M 24x1.5	30	30	24	66
45VO 18-L/18-L	18-L	18-L	M 26x1.5	M 26x1.5	32	32	24	63
45VO 20-S/20-S	20-S	20-S	M 30x2,0	M 30x2,0	36	36	27	71
45VO 22-L/22-L	22-L	22-L	M 30x2,0	M 30x2,0	36	36	32	76
45VO 25-S/25-S	25-S	25-S	M 36x2,0	M 36x2,0	46	46	34	81
45VO 28-L/28-L	28-L	28-L	M 36x2,0	M 36x2,0	41	41	32	74
45VO 30-S/30-S	30-S	30-S	M 42x2,0	M 42x2,0	50	50	33	81
45VO 35-L/35-L	35-L	35-L	M 45x2,0	M 45x2,0	50	50	34	82
45VO 38-S/38-S	38-S	38-S	M 52x2,0	M 52x2,0	60	60	38	91
45VO 42-L/42-L	42-L	42-L	M 52x2,0	M 52x2,0	60	60	38	90

Accessories
O-ring DKOL/DKOS

Optionen
deviating angle and dimensions on request

Dietzel Hydraulik GmbH
Leedenstraße 10
04626 Löbichau

Tel.: +49 (36602) 140-140

E-Mail: vertrieb@dietzel-hydraulik.de

Adapters
90 VO

Updated at:
24.05.2022

connection
both sides: 24° external cone O-ring sealing with metric nut L/S series

Material
Steel

Surface protection
Zinc-electroplated

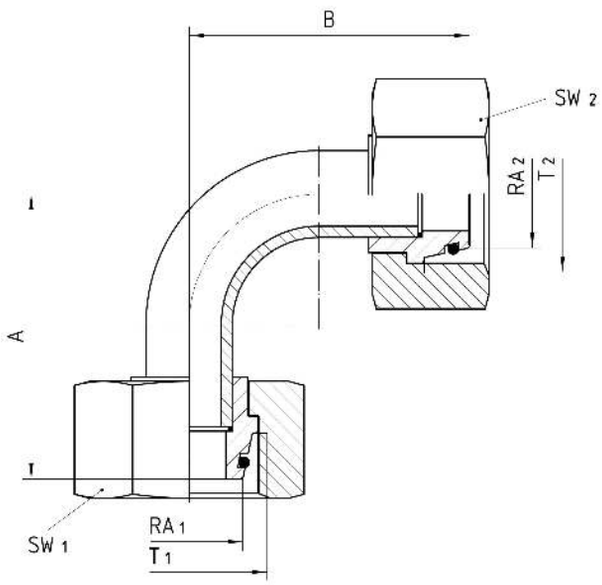

Order no.	RA1	RA2	T1	T2	SW1 in mm	SW2 in mm	A±3 in mm	B±3 in mm
90VO 6-L/ 6-L	6-L	6-L	M 12x1.5	M 12x1.5	14	14	26	26
90VO 6-S/ 6-S	6-S	6-S	M 14x1.5	M 14x1.5	17	17	26	26
90VO 8-L/ 8-L	8-L	8-L	M 14x1.5	M 14x1.5	17	17	30	30
90VO 8-S/ 8-S	8-S	8-S	M 16x1.5	M 16x1.5	19	19	31	31
90VO 10-L/10-L	10-L	10-L	M 16x1.5	M 16x1.5	19	19	34	34
90VO 10-S/10-S	10-S	10-S	M 18x1.5	M 18x1.5	22	22	35	35
90VO 12-L/12-L	12-L	12-L	M 18x1.5	M 18x1.5	22	22	34	34
90VO 12-S/12-S	12-S	12-S	M 20x1.5	M 20x1.5	24	24	36	36

Dietzel Hydraulik GmbH
Leedenstraße 10
04626 Löbichau

Tel.: +49 (36602) 140-140

E-Mail: vertrieb@dietzel-hydraulik.de

Order no.	RA1	RA2	T1	T2	SW1 in mm	SW2 in mm	A±3 in mm	B±3 in mm
90VO 14-S/14-S	14-S	14-S	M 22x1.5	M 22x1.5	27	27	37	37
90VO 15-L/15-L	15-L	15-L	M 22x1.5	M 22x1.5	27	27	43	43
90VO 16-S/16-S	16-S	16-S	M 24x1.5	M 24x1.5	30	30	45	45
90VO 18-L/18-L	18-L	18-L	M 26x1.5	M 26x1.5	32	32	49	49
90VO 20-S/20-S	20-S	20-S	M 30x2,0	M 30x2,0	36	36	54	54
90VO 22-L/22-L	22-L	22-L	M 30x2,0	M 30x2,0	36	36	62	62
90VO 25-S/25-S	25-S	25-S	M 36x2,0	M 36x2,0	46	46	65	65
90VO 28-L/28-L	28-L	28-L	M 36x2,0	M 36x2,0	41	41	71	71
90VO 30-S/30-S	30-S	30-S	M 42x2,0	M 42x2,0	50	50	76	76
90VO 35-L/35-L	35-L	35-L	M 45x2,0	M 45x2,0	50	50	84	84
90VO 38-S/38-S	38-S	38-S	M 52x2,0	M 52x2,0	60	60	84	84
90VO 42-L/42-L	42-L	42-L	M 52x2,0	M 52x2,0	60	60	90	90

Accessories
O-ring DKOL/DKOS

Optionen
deviating angle and dimensions on request

Dietzel Hydraulik GmbH
Leedenstraße 10
04626 Löbichau

Tel.: +49 (36602) 140-140

E-Mail: vertrieb@dietzel-hydraulik.de

Adapters

KOVO straight

Updated at:
13.11.2024

connection
One side: sealing head 24° external cone o-ring sealing with metric nut L / S-series Other side: metric external thread with 24° internal one and pipe connection L / S-series

Material
Steel

Surface protection
Zinc-electroplated

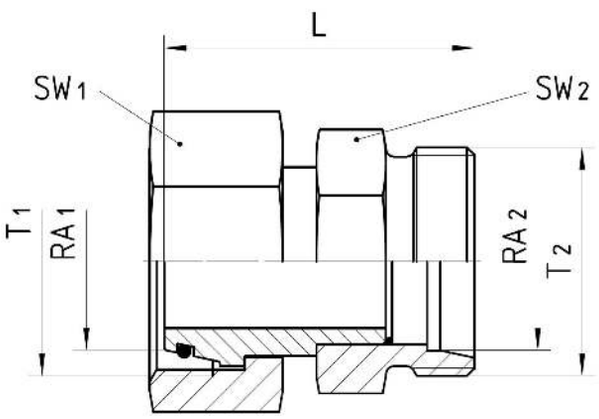

Order no.	RA1	RA2	T1	T2	SW1 in mm	SW2 in mm	L±2 in mm	Note
KOVO 6-L/ 6-L	6-L	6-L	M 12x1.5	M 12x1.5	14	12	33	
KOVO 6-L/ 8-L	6-L	8-L	M 12x1.5	M 14x1.5	14	14	32	
KOVO 6-L/10-L	6-L	10-L	M 12x1.5	M 16x1.5	14	17	34	
KOVO 6-L/ 6-S	6-L	6-S	M 12x1.5	M 14x1.5	14	14	35	
KOVO 6-L/ 8-S	6-L	8-S	M 12x1.5	M 16x1.5	14	17	35	
KOVO 6-L/10-S	6-L	10-S	M 12x1.5	M 18x1.5	17	19	35	
KOVO 6-S/ 6-L	6-S	6-L	M 14x1.5	M 12x1.5	17	12	31	
KOVO 6-S/ 6-S	6-S	6-S	M 14x1.5	M 14x1.5	17	14	34	
KOVO 6-S/ 8-S	6-S	8-S	M 14x1.5	M 16x1.5	17	17	34	
KOVO 6-S/10-S	6-S	10-S	M 14x1.5	M 18x1.5	17	19	34	

Dietzel Hydraulik GmbH
Leedenstraße 10
04626 Löbichau

Tel.: +49 (36602) 140-140

E-Mail: vertrieb@dietzel-hydraulik.de

Order no.	RA1	RA2	T1	T2	SW1 in mm	SW2 in mm	L±2 in mm	Note
KOVO 8-L/ 8-L	8-L	8-L	M 14x1.5	M 14x1.5	17	14	34	
KOVO 8-L/10-L	8-L	10-L	M 14x1.5	M 16x1.5	17	17	37	
KOVO 8-L/12-L	8-L	12-L	M 14x1.5	M 18x1.5	17	19	36	
KOVO 8-L/ 8-S	8-L	8-S	M 14x1.5	M 16x1.5	17	14	37	
KOVO 8-L/10-S	8-L	10-S	M 14x1.5	M 18x1.5	17	19	37	
KOVO 8-L/12-S	8-L	12-S	M 14x1.5	M 20x1.5	17	22	37	
KOVO 8-S/ 8-L	8-S	8-L	M 16x1.5	M 14x1.5	19	14	35	
KOVO 8-S/ 8-S	8-S	8-S	M 16x1.5	M 16x1.5	19	17	38	
KOVO 8-S/10-S	8-S	10-S	M 16x1.5	M 18x1.5	19	19	38	
KOVO 8-S/12-S	8-S	12-S	M 16x1.5	M 20x1.5	19	22	38	
KOVO 10-L/10-L	10-L	10-L	M 16x1.5	M 16x1.5	19	17	36	
KOVO 10-L/12-L	10-L	12-L	M 16x1.5	M 18x1.5	19	19	36	
KOVO 10-L/15-L	10-L	15-L	M 16x1.5	M 22x1.5	19	22	38	
KOVO 10-L/10-S	10-L	10-S	M 16x1.5	M 18x1.5	19	19	37	
KOVO 10-L/12-S	10-L	12-S	M 16x1.5	M 20x1.5	19	22	37	
KOVO 10-L/14-S	10-L	14-S	M 16x1.5	M 22x1.5	19	22	40	
KOVO 10-L/16-S	10-L	16-S	M 16x1.5	M 24x1.5	19	27	41	
KOVO 10-S/10-L	10-S	10-L	M 18x1.5	M 16x1.5	22	17	38	
KOVO 10-S/10-S	10-S	10-S	M 18x1.5	M 18x1.5	22	19	39	
KOVO 10-S/12-S	10-S	12-S	M 18x1.5	M 20x1.5	22	22	39	
KOVO 10-S/14-S	10-S	14-S	M 18x1.5	M 22x1.5	22	22	42	
KOVO 10-S/16-S	10-S	16-S	M 18x1.5	M 24x1.5	22	27	43	
KOVO 12-L/12-L	12-L	12-L	M 18x1.5	M 18x1.5	22	19	36	
KOVO 12-L/15-L	12-L	15-L	M 18x1.5	M 22x1.5	22	22	38	
KOVO 12-L/18-L	12-L	18-L	M 18x1.5	M 26x1.5	22	27	39	
KOVO 12-L/12-S	12-L	12-S	M 18x1.5	M 20x1.5	22	22	37	
KOVO 12-L/14-S	12-L	14-S	M 18x1.5	M 22x1.5	22	22	40	
KOVO 12-L/16-S	12-L	16-S	M 18x1.5	M 24x1.5	22	27	41	
KOVO 12-S/12-L	12-S	12-L	M 20x1.5	M 18x1.5	22	19	40	
KOVO 12-S/12-S	12-S	12-S	M 20x1.5	M 20x1.5	22	22	41	
KOVO 12-S/14-S	12-S	14-S	M 20x1.5	M 22x1.5	24	22	44	
KOVO 12-S/16-S	12-S	16-S	M 20x1.5	M 24x1.5	24	27	45	
KOVO 12-S/20-S	12-S	20-S	M 20x1.5	M 30x2,0	24	30	48	
KOVO 14-S/15-L	14-S	15-L	M 22x1.5	M 22x1.5	27	22	43	
KOVO 14-S/18-L	14-S	18-L	M 22x1.5	M 26x1.5	27	27	44	
KOVO 14-S/14-S	14-S	14-S	M 22x1.5	M 22x1.5	27	22	45	
KOVO 14-S/16-S	14-S	16-S	M 22x1.5	M 24x1.5	27	27	46	
KOVO 14-S/20-S	14-S	20-S	M 22x1.5	M 30x2,0	27	30	49	
KOVO 15-L/15-L	15-L	15-L	M 22x1.5	M 22x1.5	27	22	42	
KOVO 15-L/18-L	15-L	18-L	M 22x1.5	M 26x1.5	27	27	42	

Dietzel Hydraulik GmbH
Leedenstraße 10
04626 Löbichau

Tel.: +49 (36602) 140-140

E-Mail: vertrieb@dietzel-hydraulik.de

Order no.	RA1	RA2	T1	T2	SW1 in mm	SW2 in mm	L±2 in mm	Note
KOVO 15-L/22-L	15-L	22-L	M 22x1.5	M 30x2,0	27	30	45	
KOVO 15-L/16-S	15-L	16-S	M 22x1.5	M 24x1.5	27	27	45	
KOVO 15-L/20-S	15-L	20-S	M 22x1.5	M 30x2,0	27	30	45	
KOVO 16-S/18-L	16-S	18-L	M 24x1.5	M 26x1.5	30	27	45	
KOVO 16-S/22-L	16-S	22-L	M 24x1.5	M 30x2,0	30	30	48	
KOVO 16-S/16-S	16-S	16-S	M 24x1.5	M 24x1.5	30	24	47	
KOVO 16-S/20-S	16-S	20-S	M 24x1.5	M 30x2,0	30	30	50	
KOVO 16-S/25-S	16-S	25-S	M 24x1.5	M 36x2,0	30	36	54	
KOVO 18-L/18-L	18-L	18-L	M 26x1.5	M 26x1.5	32	27	41	
KOVO 18-L/22-L	18-L	22-L	M 26x1.5	M 30x2,0	32	30	44	
KOVO 18-L/28-L	18-L	28-L	M 26x1.5	M 36x2,0	32	36	45	
KOVO 18-L/20-S	18-L	20-S	M 26x1.5	M 30x2,0	32	30	46	
KOVO 18-L/25-S	18-L	25-S	M 26x1.5	M 36x2,0	32	36	50	
KOVO 20-S/22-L	20-S	22-L	M 30x2,0	M 30x2,0	36	30	55	
KOVO 20-S/28-L	20-S	28-L	M 30x2,0	M 36x2,0	36	36	56	
KOVO 20-S/20-S	20-S	20-S	M 30x2,0	M 30x2,0	36	30	57	
KOVO 20-S/25-S	20-S	25-S	M 30x2,0	M 36x2,0	36	36	61	
KOVO 20-S/30-S	20-S	30-S	M 30x2,0	M 42x2,0	36	46	63	
KOVO 22-L/22-L	22-L	22-L	M 30x2,0	M 30x2,0	36	30	48	
KOVO 22-L/28-L	22-L	28-l	M 30x2,0	M 36x2,0	36	36	49	
KOVO 22-L/35-L	22-L	35-L	M 30x2,0	M 45x2,0	36	46	52	
KOVO 22-L/25-S	22-L	25-S	M 30x2,0	M 36x2,0	36	36	54	
KOVO 22-L/30-S	22-L	30-S	M 30x2,0	M 42x2,0	36	46	56	
KOVO 25-S/28-L	25-S	28-L	M 36x2,0	M 36x2,0	46	36	53	*
KOVO 25-S/35-L	25-S	35-L	M 36x2,0	M 45x2,0	46	46	56	*
KOVO 25-S/25-S	25-S	25-S	M 36x2,0	M 36x2,0	46	36	58	*
KOVO 25-S/30-S	25-S	30-S	M 36x2,0	M 42x2,0	46	46	60	*
KOVO 25-S/38-S	25-S	38-S	M 36x2,0	M 52x2,0	46	55	65	*
KOVO 28-L/28-L	28-L	28-L	M 36x2,0	M 36x2,0	41	36	49	*
KOVO 28-L/35-L	28-L	35-L	M 36x2,0	M 45x2,0	41	46	52	*
KOVO 28-L/42-L	28-L	42-L	M 36x2,0	M 52x2,0	41	55	55	
KOVO 28-L/30-S	28-L	30-S	M 36x2,0	M 42x2,0	41	46	56	
KOVO 28-L/38-S	28-L	38-S	M 36x2,0	M 52x2,0	41	55	61	
KOVO 30-S/35-L	30-S	35-L	M 42x2,0	M 45x2,0	50	46	62	
KOVO 30-S/42-L	30-S	42-L	M 42x2,0	M 52x2,0	50	55	65	
KOVO 30-S/30-S	30-S	30-S	M 42x2,0	M 42x2,0	50	46	66	
KOVO 30-S/38-S	30-S	38-S	M 42x2,0	M 52x2,0	50	55	71	*
KOVO 35-L/35-L	35-L	35-L	M 45x2,0	M 45x2,0	50	46	55	
KOVO 35-L/42-L	35-L	42-L	M 45x2,0	M 52x2,0	50	55	58	
KOVO 35-L/38-S	35-L	38-S	M 45x2,0	M 52x2,0	50	55	64	

Dietzel Hydraulik GmbH
Leedenstraße 10
04626 Löbichau

Tel.: +49 (36602) 140-140

E-Mail: vertrieb@dietzel-hydraulik.de

Order no.	RA1	RA2	T1	T2	SW1 in mm	SW2 in mm	L±2 in mm	Note
KOVO 38-S/42-L	38-S	42-L	M 52x2,0	M 52x2,0	60	55	70	
KOVO 38-S/38-S	38-S	38-S	M 52x2,0	M 52x2,0	60	55	73	
KOVO 42-L/42-L	42-L	42-L	M 52x2,0	M 52x2,0	60	55	68	*

Accessories
O-ring DKOL/DKOS

Optionen
deviating angle and dimensions on request

Dietzel Hydraulik GmbH
Leedenstraße 10
04626 Löbichau

Tel.: +49 (36602) 140-140

E-Mail: vertrieb@dietzel-hydraulik.de

Adapters

KOVO 45°

Updated at:
13.11.2024

connection
One side: sealing head 24° external cone o-ring sealing with metric nut L / S-series Other side: metric external thread with 24° internal one and pipe connection L / S-series

Material
Steel

Surface protection
Zinc-electroplated

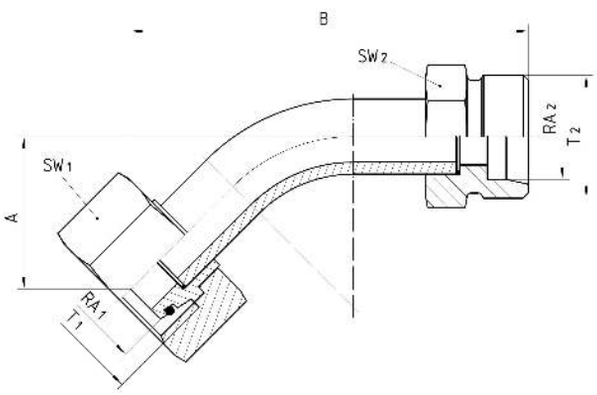

Order no.	RA1	RA2	T1	T2	SW1 in mm	SW2 in mm	A±3 in mm	B±3 in mm	Note
45KOVO 6-L/ 6-L	6-L	6-L	M 12x1.5	M 12x1.5	14	12	17	53	
45KOVO 6-S/ 6-S	6-S	6-S	M 14x1.5	M 14x1.5	17	14	16	53	
45KOVO 8-L/ 8-L	8-L	8-L	M 14x1.5	M 14x1.5	17	14	19	54	
45KOVO 8-S/ 8-S	8-S	8-S	M 16x1.5	M 16x1.5	19	17	19	56	
45KOVO 10-L/10-L	10-L	10-L	M 16x1.5	M 16x1.5	19	17	23	63	
45KOVO 10-S/10-S	10-S	10-S	M 18x1.5	M 18x1.5	22	19	22	55	
45KOVO 12-L/12-L	12-L	12-L	M 18x1.5	M 18x1.5	22	19	20	64	
45KOVO 12-S/12-S	12-S	12-S	M 20x1.5	M 20x1.5	24	22	20	57	

Dietzel Hydraulik GmbH
Leedenstraße 10
04626 Löbichau

Tel.: +49 (36602) 140-140

E-Mail: vertrieb@dietzel-hydraulik.de

Order no.	RA1	RA2	T1	T2	SW1 in mm	SW2 in mm	A±3 in mm	B±3 in mm	Note
45KOVO 14-S/14-S	14-S	14-S	M 22x1.5	M 22x1.5	27	22	22	63	
45KOVO 15-L/15-L	15-L	15-L	M 22x1.5	M 22x1.5	27	22	23	70	
45KOVO 16-S/16-S	16-S	16-S	M 24x1.5	M 24x1.5	30	24	24	70	
45KOVO 18-L/18-L	18-L	18-L	M 26x1.5	M 26x1.5	32	27	24	68	
45KOVO 20-S/20-S	20-S	20-S	M 30x2,0	M 30x2,0	36	30	27	76	
45KOVO 22-L/22-L	22-L	22-L	M 30x2,0	M 30x2,0	36	30	32	82	
45KOVO 25-S/25-S	25-S	25-S	M 36x2,0	M 36x2,0	46	36	34	91	
45KOVO 28-L/28-L	28-L	28-L	M 36x2,0	M 36x2,0	41	36	32	81	
45KOVO 30-S/30-S	30-S	30-S	M 42x2,0	M 42x2,0	50	46	33	93	
45KOVO 35-L/35-L	35-L	35-L	M 45x2,0	M 45x2,0	50	46	34	89	
45KOVO 38-S/38-S	38-S	38-S	M 52x2,0	M 52x2,0	60	55	45	125	
45KOVO 42-L/42-L	42-L	42-L	M 52x2,0	M 52x2,0	60	55	38	99	*

Accessories
O-ring DKOL/DKOS

Optionen
deviating angle and dimensions on request

Dietzel Hydraulik GmbH
Leedenstraße 10
04626 Löbichau

Tel.: +49 (36602) 140-140

E-Mail: vertrieb@dietzel-hydraulik.de

Adapters

KOVO 90°

Updated at:
13.11.2024

connection
One side: sealing head 24° external cone o-ring sealing with metric nut L / S-series Other side: metric external thread with 24° internal one and pipe connection L / S-series

Material
Steel

Surface protection
Zinc-electroplated

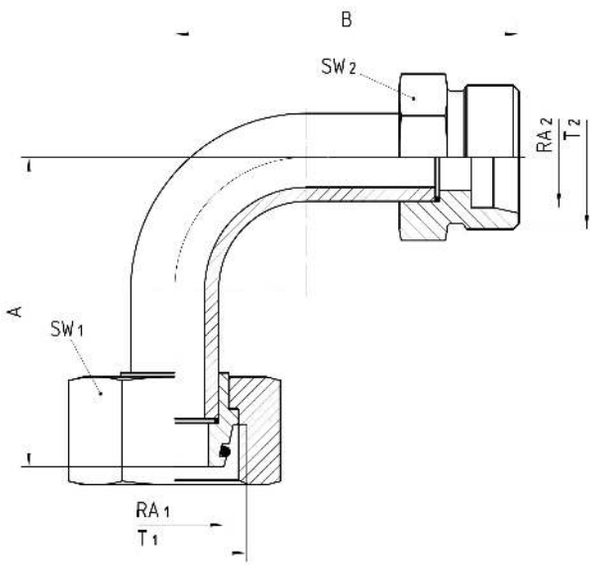

Order no.	RA1	RA2	T1	T2	SW1 in mm	SW2 in mm	A±3 in mm	B±3 in mm
90KOVO 6-L/ 6-L	6-L	6-L	M 12x1.5	M 12x1.5	14	12	26	30
90KOVO 6-S/ 6-S	6-S	6-S	M 14x1.5	M 14x1.5	17	14	26	33
90KOVO 8-L/ 8-L	8-L	8-L	M 14x1.5	M 14x1.5	17	14	30	32
90KOVO 8-S/ 8-S	8-S	8-S	M 16x1.5	M 16x1.5	19	17	32	35
90KOVO 10-L/10-L	10-L	10-L	M 16x1.5	M 16x1.5	19	17	34	40
90KOVO 10-S/10-S	10-S	10-S	M 18x1.5	M 18x1.5	22	19	35	38

Dietzel Hydraulik GmbH
Leedenstraße 10
04626 Löbichau

Tel.: +49 (36602) 140-140

E-Mail: vertrieb@dietzel-hydraulik.de

Order no.	RA1	RA2	T1	T2	SW1 in mm	SW2 in mm	A±3 in mm	B±3 in mm
90KOVO 12-L/12-L	12-L	12-L	M 18x1.5	M 18x1.5	22	19	34	36
90KOVO 12-S/12-S	12-S	12-S	M 20x1.5	M 20x1.5	24	22	36	40
90KOVO 14-S/14-S	14-S	14-S	M 22x1.5	M 22x1.5	27	22	37	41
90KOVO 15-L/15-L	15-L	15-L	M 22x1.5	M 22x1.5	27	22	43	49
90KOVO 16-S/16-S	16-S	16-S	M 24x1.5	M 24x1.5	30	24	45	49
90KOVO 18-L/18-L	18-L	18-L	M 26x1.5	M 26x1.5	32	27	52	54
90KOVO 20-S/20-S	20-S	20-S	M 30x2,0	M 30x2,0	36	30	54	59
90KOVO 22-L/22-L	22-L	22-L	M 30x2,0	M 30x2,0	36	30	62	68
90KOVO 25-S/25-S	25-S	25-S	M 36x2,0	M 36x2,0	46	36	65	77
90KOVO 28-L/28-L	28-L	28-L	M 36x2,0	M 36x2,0	41	36	71	77
90KOVO 30-S/30-S	30-S	30-S	M 42x2,0	M 42x2,0	50	46	76	90
90KOVO 35-L/35-L	35-L	35-L	M 45x2,0	M 45x2,0	50	46	84	91
90KOVO 38-S/38-S	38-S	38-S	M 52x2,0	M 52x2,0	60	55	87	96
90KOVO 42-L/42-L	42-L	42-L	M 52x2,0	M 52x2,0	60	55	90	100

Accessories
O-ring DKOL/DKOS

Optionen
deviating angle and dimensions on request

Dietzel Hydraulik GmbH
Leedenstraße 10
04626 Löbichau

Tel.: +49 (36602) 140-140

E-Mail: vertrieb@dietzel-hydraulik.de

Adapters

Weld-on branch

Updated at:
24.05.2022

Connection
metric external thread with 60° internal cone LL series for weld-on

Standard
DIN 7631

Material
Steel

Surface protection
Zinc-electroplated

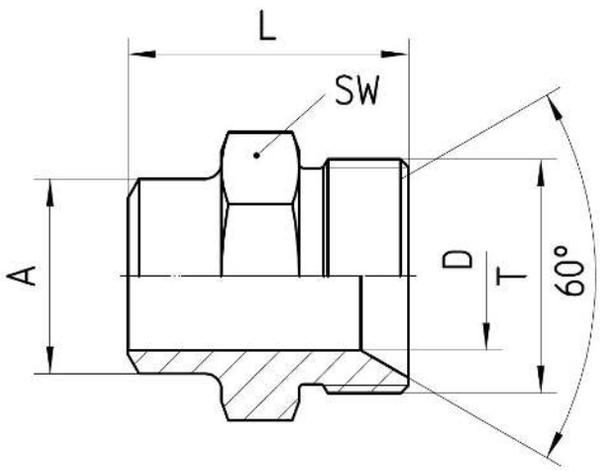

Order no.	DN in mmm	T1	SW in mm	A in mm	D in mm	L ±3 in mm
AS M 30x1.5	20	M 30x1.5	32	25,0	19	36
AS M 38x1.5	25	M 38x1.5	41	32,0	25	38
AS M 45x1.5	32	M 45x1.5	46	38,0	31	42
AS M 52x1.5	38	M 52x1.5	55	46,0	38	44
AS M 65x2	51	M 65x2.0	65	61,0	50	46
AS M 78x2	60	M 78x2.0	80	76.5	60	47

Dietzel Hydraulik GmbH
Leedenstraße 10
04626 Löbichau

Tel.: +49 (36602) 140-140

E-Mail: vertrieb@dietzel-hydraulik.de

Adapters

Threaded branch

Updated at:
24.05.2022

Connection
metric external thread with 60° internal cone LL series

Standard
DIN 7631 / DIN 3852

Application
for suction and return lines

Material
Steel

Surface protection
Zinc-electroplated

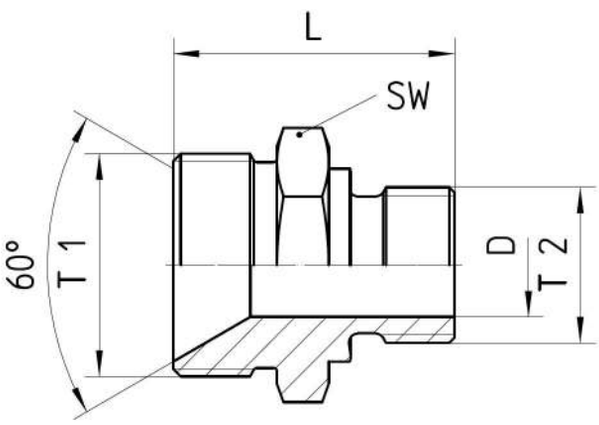

Order no.	DN in mm	T1	T2	SW in mm	D in mm	L ±3 in mm
GE M 52x1.5 G 1 1/4	38	M 52x1.5	G 1 1/4	55	30	54
GE M 52x1.5 G 1 1/2	38	M 52x1.5	G 1 1/2	55	39	56
GE M 65x2 G 1 1/2	51	M 65x2,0	G 1 1/2	75	39	57
GE M 65x2 G 2	51	M 65x2,0	G 2	75	50	57
GE M 78x2 G 2	60	M 78x2,0	G 2	90	50	57
GE M 78x2 G 2 1/2	60	M 78x2,0	G 2 1/2	90	56	59

Dietzel Hydraulik GmbH
Leedenstraße 10
04626 Löbichau

Tel.: +49 (36602) 140-140

E-Mail: vertrieb@dietzel-hydraulik.de

Adapters

Straight connector

Updated at:
24.05.2022

Connection
both sides: external thread with 60° internal cone LL series

Standard
DIN 7631

Application
for suction and return lines

Material
Steel

Surface protection
Zinc-electroplated

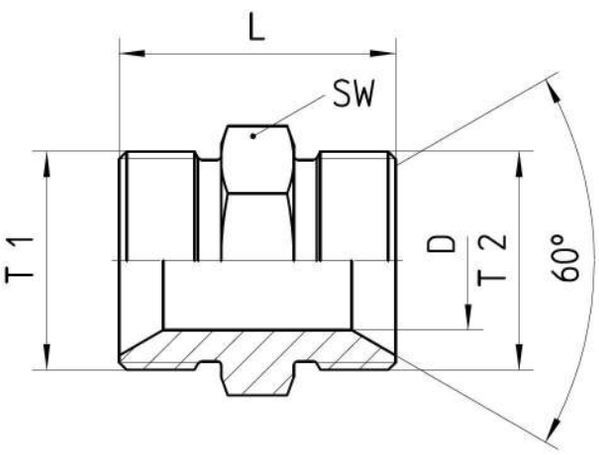

Order no.	DN in mm	T1	T2	SW in mm	D in mm	L ±3 in mm
G M 30x1.5/M 30x1.5	20	M 30x1.5	M 30x1.5	32	19	38
G M 38x1.5/M 38x1.5	25	M 38x1.5	M 38x1.5	41	25	45
G M 45x1.5/M 45x1.5	32	M 45x1.5	M 45x1.5	46	32	50
G M 52x1.5/M 52x1.5	38	M 52x1.5	M 52x1.5	55	39	50
G M 65x2/M 65x2	51	M 65x2.0	M 65x2.0	75	50	52
G M 78x2/M 78x2	60	M 78x2.0	M 78x2.0	90	56	52

Dietzel Hydraulik GmbH
Leedenstraße 10
04626 Löbichau

Tel.: +49 (36602) 140-140

E-Mail: vertrieb@dietzel-hydraulik.de

Table of Contents

tubes 355
compensatoren and decoupling elements 356
clamp terminals 357
pipe connections 359
pipe bends 360

Updated at: 13.11.2024

Dietzel Hydraulik GmbH
Leedenstraße 10
04626 Löbichau

Tel.: +49 (36602) 140-140

E-Mail: vertrieb@dietzel-hydraulik.de

Thin-walled tubes

tubes

Updated at:
24.05.2022

Order no.	tube D	material
RO038-004	38,0 x 2,0	1.4571
RO040-003	40,0 x 2,0	1.4541
RO042-004	42,0 x 2,0	1.4571
RO044-004	44,5 x 2,0	1.4541
RO045-008	45,0 x 1,5	1.4571
RO048-006	48,3 x 2,6	1.4301
RO050-002	50,0 x 1,5	1.4301
RO051-010	51,0 x 2,0	1.4571
RO057-004	57,0 x 2,0	1.4571
RO060-045	60,3 x 2,0	1.4571
RO063-013	63,5 x 2,0	1.4404
RO065-014	65,0 x 2,0	1.4301
RO070-007	70,0 x 2,0	1.4301
RO076-001	76,1 x 2,0	1.4301
RO080-009	80,0 x 2,0	1.4301
RO085-001	85,0 x 2,0	1.4571
RO088-026	88,9 x 2,0	1.4541
RO101-021	101,6 x 2,0	1.4404
RO104-003	104,0 x 2,0	1.4404
RO108-006	108,0 x 3,0	1.4301
RO114-037	114,3 x 2,0	1.4301
RO119-001	119,0 x 1,5	1.4301
RO121-005	121,0 x 4,0	1.4541
RO127-014	127,0 x 2,0	1.4301
RO129-002	129,0 x 2,0	1.4301
RO133-009	133,0 x 3,0	1.4301
RO139-020	139,7 x 2,0	1.4571
RO154-003	154,0 x 2,0	1.4301
RO204-001	204,0 x 2,0	1.4301

Dietzel Hydraulik GmbH
Leedenstraße 10
04626 Löbichau

Tel.: +49 (36602) 140-140

E-Mail: vertrieb@dietzel-hydraulik.de

Thin-walled tubes

compensatoren and decoupling elements

Updated at:
24.05.2022

Order no.	comment	connection	length	material
63.BT-097	compensator, Axial- DN80 PN10	88,9 x 2	174	1.4541
63.DR-013	compensator, Axial- DN125 PN1	139,7 x 4	220	1.4541
63.DR-031	compensator, Axial- DN100 PN6 inkl. APZ3.1	101,6 x 2	105	1.4571
63.DR-037	compensator DN 86	88,9 x 2	248	1.4301
63.DR-042	compensator, Axial- DN100 PN1	127 x 2	250	1.4571
63.DR-043	compensator, Axial- DN85 PN0,5	101,6 x 2	350	1.4571
63.DR-044	compensator, Axial- DN85 PN0,5	101,6 x 2	250	1.4571
63.DR-064	decoupling elements DN86 L268	88,9 x 2	268	1.4301
63.DR-087	compensator DN65 PN2,5	76,1 x 2	268	1.4541

Dietzel Hydraulik GmbH
Leedenstraße 10
04626 Löbichau

Tel.: +49 (36602) 140-140

E-Mail: vertrieb@dietzel-hydraulik.de

Thin-walled tubes

clamp terminals

Updated at:
13.11.2024

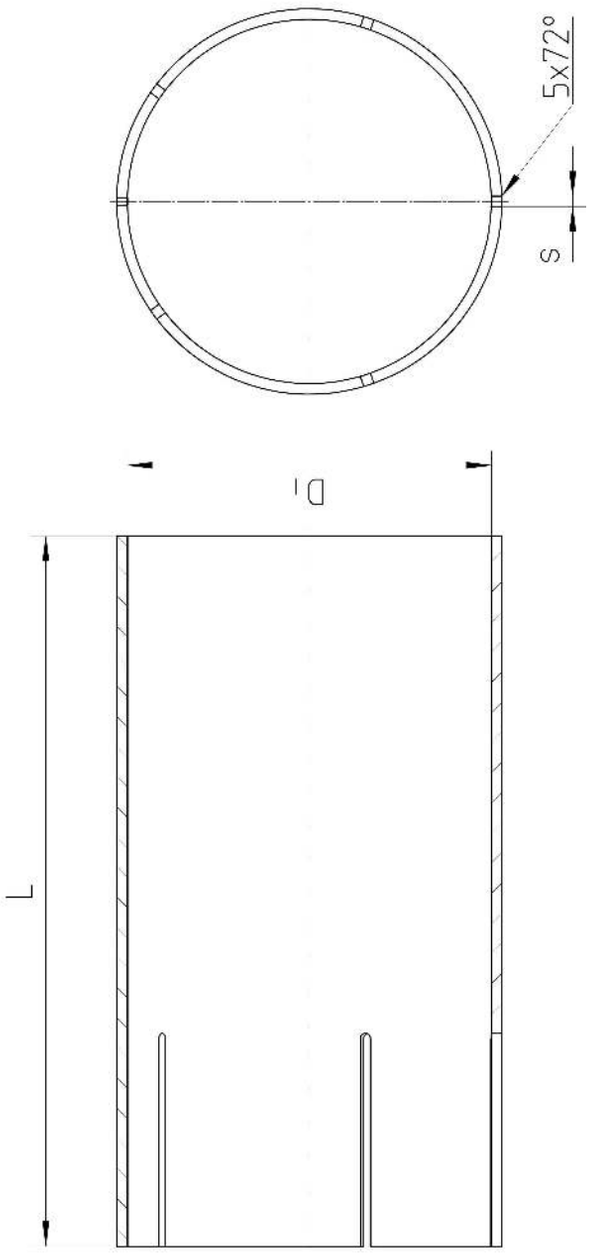

Order no.	comment	Ø	length	material
63.DR-065	5S-2.0/0-051,3-2,0-1.4301	51,3 x 2	100	14.301
63.DR-067	5S-2.1/2-064,0-2,0-1.4301	64,0 x 2	100	14.301
63.DR-069	5S-3.0/0-076,7-2,0-1.4301	76,7 x 2	100	14.301
BW125920	5S-3.1/2-089,4-2,0-1.4301	89,4 x 2	100	14.301
63.DR-073	5S-4.0/0-102,1-2,0-1.4301	101,1 x 2	100	14.301
63.DR-075	5S-4.1/2-114,8-2,0-1.4301	114,8 x 2	100	14.301
63.DR-077	5S-5.0/0-128,0-2,0-1.4301	128,0 x 2	100	14.301

Dietzel Hydraulik GmbH
Leedenstraße 10
04626 Löbichau

Tel.: +49 (36602) 140-140

E-Mail: vertrieb@dietzel-hydraulik.de

Order no.	comment	Ø	length	material
63.DR-081	5S-4.0/0-104,0-2,0-1.4301	104,0 x 2	100	14.301
63.DR-088	5S-5.0/0-135,0-2,0-1.4301	135,0 x 2	100	14.301

Dietzel Hydraulik GmbH
Leedenstraße 10
04626 Löbichau

Tel.: +49 (36602) 140-140

E-Mail: vertrieb@dietzel-hydraulik.de

Thin-walled tubes

pipe connections

Updated at:
24.05.2022

Order no.	comment	tube D	length	material
63.DR-001	female v-connector	76,1 x 2,0	100	1.4303
63.DR-002	male v-connector	76,1 x 2,0	100	1.4303
63.DR-003	female v-connector	101,6 x 2,0	100	1.4303
63.DR-010	female ball connector	101,6 x 2,0	50	1.4303
63.DR-011	male v-connector	101,6 x 2,0	100	1.4303
63.DR-012	female v-connector	114,3 x 2,0	100	1.4303
63.DR-021	male v-connector	114,3 x 2,0	100	1.4303
63.DR-022	female v-connector	114,3 x 3,0	100	3.3206
63.DR-023	v-connector W110?	117,8 x 1,5	100	1.4303
63.DR-024	female v-connector	127 x 2,0	50	1.4303
63.DR-029	v-connector W110?	76,1 x 1,5	100	1.4303
63.DR-030	v-connector W110?	101,6 x 1,5	100	1.4303
63.DR-034	female v-connector	88,9 x 2,0	100	1.4303
63.DR-035	male v-connector	88,9 x 2,0	100	1.4303
63.DR-045	female ball connector	101,6 x 2,0	50	1.4301
63.DR-046	male ball connector	101,6 x 2,0	50	1.4301
63.DR-048	male v-connector	127 x 2,0	100	1.4303
BW126172	v-connector W110?	119 x 2,0	100	1.7451
63.DR-092	female ball connector MB	114,3 x 2,0	50	1.4301
63.DR-093	DEUTZ female v-connector	76,1 x 2,0	50	1.4301
63.DR-094	DEUTZ male v-connector	76,1 x 2,0	50	1.4301

Dietzel Hydraulik GmbH
Leedenstraße 10
04626 Löbichau

Tel.: +49 (36602) 140-140

E-Mail: vertrieb@dietzel-hydraulik.de

Thin-walled tubes

pipe bends

Updated at:
24.05.2022

Order no.	radius	tube D	material
RB038-006	R45	38,0 x 2,6	1.4571
RB044-004	R51	44,5 x 2,0	1.4541
RB048-006	R57	48,3 x 2,0	1.4541
RB051-007	R63,5	51,0 x 2,6	1.4571
RB057-003	R72	57,0 x 2,9	1.4571
RB060-009	R76	60,3 x 2,9	1.4571
RB063-009	R82,5	63,5 x 2,0	1.4404
RB070-006	R80	70,0 x 2,0	1.4404
RB076-002	R95	76,1 x 2,0	1.4541
RB084-002	R105	84,0 x 2,0	1.4571
RB088-025	R76	88,9 x 2,0	1.4541
RB101-023	R133,5	101,6 x 2,0	1.4307
RB104-001	R100	104,0 x 2,0	1.4307
RB108-004	R100	108,0 x 3,0	1.4571
RB114-023	R102	114,3 x 2,0	1.4301
RB129-001	R187,5	129,0 x 2,0	1.4301
RB139-010	R190	139,7 x 4,0	1.4571
RB154-001	R225	154,0 x 2,0	1.4301
RB204-001	R300	204,0 x 2,0	1.4301

Dietzel Hydraulik GmbH
Leedenstraße 10
04626 Löbichau

Tel.: +49 (36602) 140-140

E-Mail: vertrieb@dietzel-hydraulik.de